OPERATION MANUAL

TH2684/TH2684A

Insulation Resistance Meter

Changzhou Tonghui Electronic Co. , Ltd.

Add: *No.3, Tianshan Road, New District, Changzhou, Jiangsu*

TEL：*（0519）85132222，85113342*

FAX：*（0519）85109972*

EMAIL：*sales@tonghui.com.cn*

Http://www.tonghui.com.cn

Manual Printing History

The manual's printing date indicates its current edition. The printing date changes when a new edition is printed. (Minor corrections and updates that are incorporated at reprint do not cause the date to change.) The manual edition changes when extensive technical changes are incorporated.

March 2011…….. First edition

First Edition

March 2011

Notice: Descriptions contained in this manual may not cover all information about this instrument. Introductions to the improvements of the instrument in performance, function, internal structure, outer appearance, accessories, packing material, etc. are subject to change without notice. If you find any inconformity of this manual with our instruments, please contact us for further consultation by the address listed on the cover.

Safety Cautions:

⏚ **Ground**	**The instrument is class Ⅰ. Make sure that there is a ground connection in the mains outlet. Failure to do this may cause personnel injury because of the existence of static or induced electricity on the instruement cover.**
⚡ **Shock Hazard**	**At the phases of operating, testing and maintaing the instrument, electric shock must be avoided. Do not attempt to remove the instrument cover, replace the fuse or maintain the instrument unless another person, capable of rendering first aid and resuscitation, is present and the power plug is unplugged. Even under this condtion, dangerous voltages may also exist on capacitors. For this reason, all servicing operations mentioned above must be taken after discharging the circuit and be performed by professionals.**
⚡ **Shock Damage**	**For the presence of high voltage in test terminals, it is important to connect and disconnect the DUT correctly in all test phases. Failure to to do this may cause damage to the instrument and injury to personel.** **User should be liable for all fees to repair the damages that are caused by abnormal operations.** **See 1.2.4.**
~ **Power Supply**	**Be sure to use a power supply in accordance with the specifications in this manual. Failure to comply with these specifications may result in damage to the instrument.**
✸ **Keep away from and explosive atmosphere**	**Do not operate the instruement in the presence of explosive and flammble gases or dust. Operation of any electrical instrument in such an environment constitutes a definite safty hazard.**
⚠ **Other cautions**	**Do not apply any voltage or current source in the test terminals.**
☞ **Note**	**Important supplement or warning for the stated content.**

Contents

Chapter 1 Introduction 1

1.1 Introduction 1
1.2 Service conditions 1
1.2.1 Power 1
1.2.2 Enviromental temperature and humidity 2
1.2.3 Warm-up 2
1.2.4 Cautions ⚠ 2
1.3 Dimension and weight 2
1.4 Safety 2
1.4.1 Insulation resistance 3
1.4.2 Insulation intensity 3
1.4.3 Leakage current 3
1.5 Electromagnetic compatibility 3

Chapter 2 Introduction to Front and Rear Panels 4

2.1 Instroduction to front panel 4
2.2 Introduction to rear panel 6
2.3 Display zone 7
2.4 Main menu keys and their corresponding display pages 8
2.4.1 DISP 8
2.4.2 SETUP 9
2.4.3 SYSTEM 9
2.5 Basic operations 9
2.6 Start-up 10

Chapter 3 [DISP] 11

3.1 <MEASURE DISP> 11
3.1.1 HV1 12
3.1.2 I1_MAX 13
3.1.3 HV2 13
3.1.4 I2_MAX 15
3.1.5 SPEED 15
3.1.6 Average (AVG) 16
3.1.7 RANGE 16
3.1.8 Rin_L 17
3.1.9 TRIG 17
3.1.10 MODE 18
3.1.11 FILE 18
3.2 BIN DISP 19
3.2.1 FILE 19
3.3 BARGRAPH DISP 20

3.3.1 BAR SCALE 21
3.3.2 FILE 22
3.4 SEQUENCE DISP 22
3.4.1 FILE 23
3.5 XY GRAPH 23
3.6 SCAN DISP 24
3.6.1 FILE 24

Chapter 4 [SETUP] 25

4.1 <MEASURE SETUP> 25
4.1.1 RESULT 26
4.1.2 HV2 TRACK 27
4.1.3 DISCHARGE 27
4.1.4 MEASURE DELAY 28
4.1.5 CHARGE TIME 29
4.1.6 HUM REJECT 30
4.1.7 CONTACT CHECK 30
4.2 LIMIT SETUP 31
4.2.1 COMP: ON/OFF 32
4.2.2 Limit mode of compare function 32
4.2.3 Setting nominal value 34
4.2.4 High and low limits 34
4.2.5 File manage 35
4.2.6 TOOLS 35
4.3 BARGRAPH SETUP 35
4.3.1 BAR SCALE 36
4.3.2 FILE 37
4.4 SEQUENCE SETUP 37
4.4.1 SELECTED SEQ. 38
4.4.2 DEFAULT SEQ. 39
4.4.3 USER SEQ. 40
4.4.4 FILE 40
4.5 SEQ. CONTENT 41
4.5.1 Basic test theory and specifictaions 42
4.5.2 ITEM 43
4.5.3 NO. 47
4.5.4 HV 48
4.5.5 RANG 48
4.5.6 AVG 49
4.5.7 LOW, HIGH 50
4.5.8 TIME 51
4.5.9 FILE 51
4.6 XY GRAPH SETUP 52
4.6.1 X-SCALE 52
4.6.2 SET TIME 53
4.6.3 Y-SCALE 53
4.6.4 CUR SCOPE 53

4.6.10 FILE 54
4.7 SCAN SETUP 55
4.7.1 SELECTED SEQ. 55
4.7.2 SCAN START NUM 56
4.7.3 SCAN END NUM 56
4.7.4 SCAN RESULT 57
4.7.5 SCAN CONNECT 57
4.7.6 FILE 57
4.8 USER ADJUST 58
4.8.1 OPEN CORR：ON/OFF 58
4.8.2 OPEN CORR 59
4.8.3 LOAD CORR: ON/ OFF 60
4.8.4 REFERENCE 60
4.8.5 FILE 60

Chapter 5 [SYSTEM] 61

5.1 <SYSTEM SETUP> 61
5.1.1 L CD contrast 61
5.1.2 LCD Style 62
5.1.3 Pass beeper 62
5.1.4 Fail beeper 62
5.1.5 Language 63
5.1.6 Handler 63
5.1.7 Password 64
5.1.8 Bus mode 64
5.1.9 GPIB address 65
5.1.10 Baud rate 65
5.1.11 Time 65
5.2 <FILE MANAGE> 66
5.2.1 *.STA 68
5.2.2 Operational steps for file manage 69

Chapter 6 Measurement Procedures and Examples 73

6.1 Safety Precautions 73
6.2 Installation 73
6.3 Example for automatic testing 74
6.4 Insulation Testing of Capacitors 75
6.5 Charge Resistors for Automated IR Testing 77
6.6 Insulation resistance measurement 81
6.7 Examples for sequence test 84

Chapter 7 Test Performance 86

7.1 I.R./L.C. TEST 86

7.1.1 Measurement parameters 86
7.1.2 General specifications 86
7.1.3 Specifications 87
7.2 Safety summary 88
7.2.1 Insulation resistance (IR) 88
7.2.2 Insulation intension 88
7.2.3 Leakage current 88
7.2.4 The EMC requirement 88

Chapter 8 Remote Control 89

8.1 RS232C interface operation 89
8.1.1 RS232C connection 89
8.1.2 Communicating with PC 90
8.2 GPIB interface operation 91
8.2.1 GPIB bus 91
8.2.2 GPIB interface capability 94
8.2.3 GPIB addressing 94
8.2.4 GPIB bus commands 94
8.2.5 SCPI（Standard Commands for Programmable Instruments） 95
8.3 USB remote control system 96
8.3.1 System configuration 96
8.3.2 Install drive 96
8.4 USBCDC virtual serial port 97
8.4.1 System configuration 97
8.4.2 Install drive 97

Chapter 9 Command Reference 99

9.1 GPIB common commands for TH2684 99
9.2 Command structure 101
9.3 Command syntax 102
9.4 Input format 103
9.5 SCPI commands 104
9.5.1 System commands 104
9.5.2 DISPlay subsystem commands 104
9.5.3 MsetSETup subsystem commands 107
9.5.4 TRIGger subsystem command 111
9.5.5 HTOUtput subsystem commands 112
9.5.6 HUMReject subsystem commands 112
9.5.7 CCHEck subsystem commands 112
9.5.8 MESTb subsystem commands 113
9.5.9 MEER subsystem commands 113
9.5.10 LIMIt subsystem commands 114
9.5.11 Mass MEMory subsystem commands 116
9.5.12 UserADJust subsystem commands 117
9.5.13 XYGRaph subsystem commands 120

9.5.14 SEQSetup subsystem commands 122
9.5.15 SeqCONt subsystem commands 124
9.5.16 SCANSetup subsystem commands 126
9.5.17 BARSetup subsystem commands 128
9.5.18 FETCh? subsystem commands 129

Chapter 10 Handler Interface 130

10.1 Pins of HANDLER interface 130
10.2 Electrical characteristics 131
10.3 BIN signals 132
10.3.1 BIN signals in the test display page. 132
10.3.2 BIN signals in the sequence display page 133
10.4 Examples for HANDLER input/ output 133

Chapter 11 Package Contents and Warranty 134

11.1 Package contents 134
11.2 Warranty 134

Chapter 1 Introduction

Thank you for your purchase and use of our products! Before using the instrument, please locate the items listed on the package list or in this manual to ensure nothing is missing. If in the case that any item is missing, please contact us without delay.

1.1 Introduction

TH2684/TH2684A is an insulation resistance meter that is high in speed and accuracy. It bears the advantages of LCD display, user-friendly menu, simple operations and great conveniences. Interfaces, such as USB, HANDLER RS232C, scanning and IEEE488 (optional) are available, making it possible for the instrument to be used in an automatic sorting system and PC remote control operations.

Basic specification:

- Test voltage range: TH2684: 10V to 505V
  TH2684A: 10V to 1005V
- Charging current range: TH2684: 2 mA, 25 mA, 200mA selectable
- TH2684A: 2 mA, 25 mA, 100mA selectable
- Resistance measurement range: TH2684: 10kΩ to 50TΩ
  TH2684A: 10kΩ to 100TΩ
- Measurement accuracy: ±2%(<1TΩ)
- Contact check: Check the contact of capacitive materials such as capacitors, cables being good or bad.
- Power failure data-store: This function is supported by a lithium battery with a 2-year battery life. If it exceeds 2 years, this function may be disabled.
- IEEE-488 interface (optional): this interface provides convenience for instrument and computer or other instruments to make an automatical test system.
  The command of RS-232 and IEEE-488 interface is written by SCPI format.
- HANDLER interface: the instrument is synchronized with the machinery processing instrument in automatical test system, and the result is output to the machinery processing instrument.

1.2 Service conditions

1.2.1 Power

Main voltage: 220V (1±10%)
Frequency: 50Hz/60Hz (1±5%)
Consumption: <120VA

1.2.2 Enviromental temperature and humidity

Normal working temperature: 0°C～40°C, humidity: < 90%RH
Reference working temperature: 20°C±8°C, humidity: < 80%RH
Transportation temperature: 0°C～55°C, humidity: ≤ 93%RH

1.2.3 Warm-up

Warm up time: ≥ 30 min.

1.2.4 Cautions ⚠

（1） Please do not operate the instrument in the places where is vibrative, dusty, under direct sunlight, or where there is corrosive air.
（2） Please store the instrument in an airy room where temperature is between 5℃ and 40℃, relative humidity is less than 85% RH and no corrosive impurities and direct sunlight exists.If the instrument will not be put in use for a time, please have it properly packed with its original box or a similar box for storing.
（3） Although the instrument has been specially designed for reducing the noise caused by ac power, a place with low noise is still recommended. If this cannot be arranged, please make sure to use power filter for the instrument.
（4） TH2684/2684A has the cooling fan on the rear panel and cooling holes on both sides. High temperature inside inside will decrease the measurement accuracy, so sufficient space must be kept around the instrument to avoid obstructing the air flow of the cooling fans.
（5） Do not frequently turn on or off the instrument, doing so will lead to the loss of the calibrated data and the data saved by users.
（6）**Correct test methods:**
DO NOT connect a capacitor to the instrument when it is outputting a high voltage (>50V). Abnormal operations may cause damages to the instrument, in this case user should be liable for all maintenance fees.

1.3 Dimension and weight

Dimension (W*H*D): 350mm*120mm*400mm
Weight: approx. 7kg

1.4 Safety

The instrument is the class I.

1.4.1 Insulation resistance

Under the reference working condition, the insulation resistance between power terminal and shell is no less than 50MΩ.
Under transportation condition, the insulation resistance between power terminal and shell is no less than 2MΩ.

1.4.2 Insulation intensity

Under the reference working condition, the power terminal and shell can withstand a rated AC voltage of 1.5kV, 50Hz for 1Min, and no breakdown and arc phenomenon exists.

1.4.3 Leakage current

Leakage current is no larger than 3.5mA.

1.5 Electromagnetic compatibility

Power instaneous sensitivity is based on GB6833.4.
Transmission sensitivity is base on GB6833.6.
Radiated interference is based on GB6833.10.

Chapter 2 Introduction to Front and Rear Panels

2.1 Instroduction to front panel

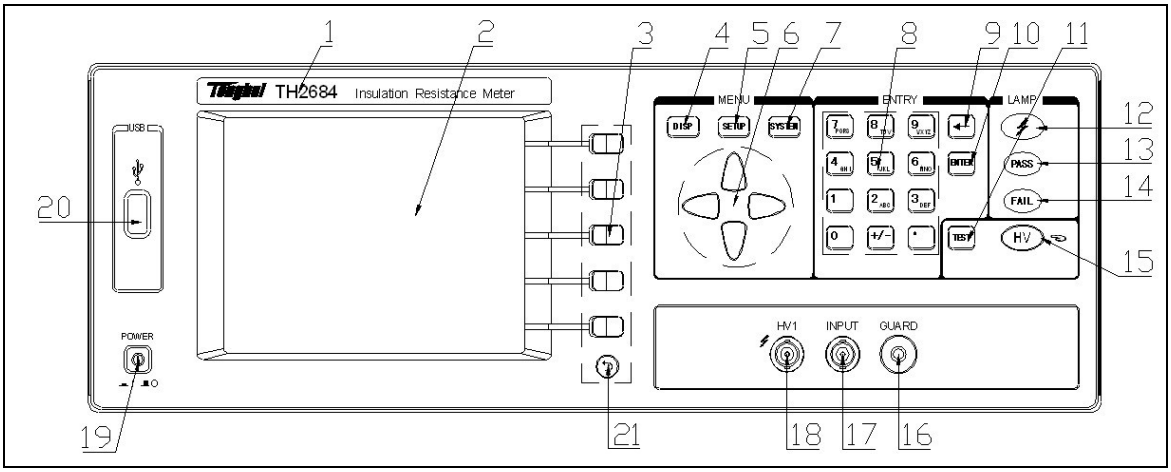

Figure 2-1 Front Panel

Introduction to the front panel is as follows:

Table 2-1 Introduction to the front panel

No.	Name	Introduction
1	Brand and model	TH2684 or TH2684A Insulation Resistance Meter
2	LCD	320*240 dot-matrix LCD displaying all measurement parameters, status, measurement results, etc.
3	SOFTKEYs	The five keys have different functions in different menus.
4	DISPLAY	Enter the measure display page.
5	SETUP	Enter the measure setup page.
6	CURSOR	Control the movement of cursor on the screen, the selected parameter is displayed with

		highlight.
7	SYSTEM	Enter the system setup page.
8	Number/ Letter keyboard	Input the desired number or character (file name).
9	BACKSPACE	Delete numbers or letters if desired.
10	ENTER	Confirm input numbers.
11	TEST	Trigger a test or start the test sequence when the instrument is set in manual trigger mode.
12	HV indicator（⚡）	The indicator lights when the voltage across the two test terminals is higher than 0.4V; otherwise it lights out.
13	PASS indicator	The indicator lights when the limit setup reqirements are met; otherwise it lights out.
14	FAIL	The indicator lights when the limit setup reqirements are not met; otherwise it lights out.
15	HV	Start or stop the high voltage test. Press this button one time to start the high voltage test; press it again to stop the high voltage test or the test sequence.
16	GUARD	Connect with the DUT shielding layer in the purpose of isolating extermal electromagnetic interference and improving measurement accuracy and stability.
17	INPUT	INPUT: current sampling terminal
18	HV1⚡	HV1（-）: negative voltage output terminal ⚡ Provide voltage output for testing.
19	POWER⚡	Switch on or off 220V/110V. In position of the push-button switch means the power supply is on. Out position of the push-button switch means the power supply is off.
20	USB interface	Communicate with an USB device.
21	PRINT	Print the current displaying page into an USB device.

2.2 Introduction to rear panel

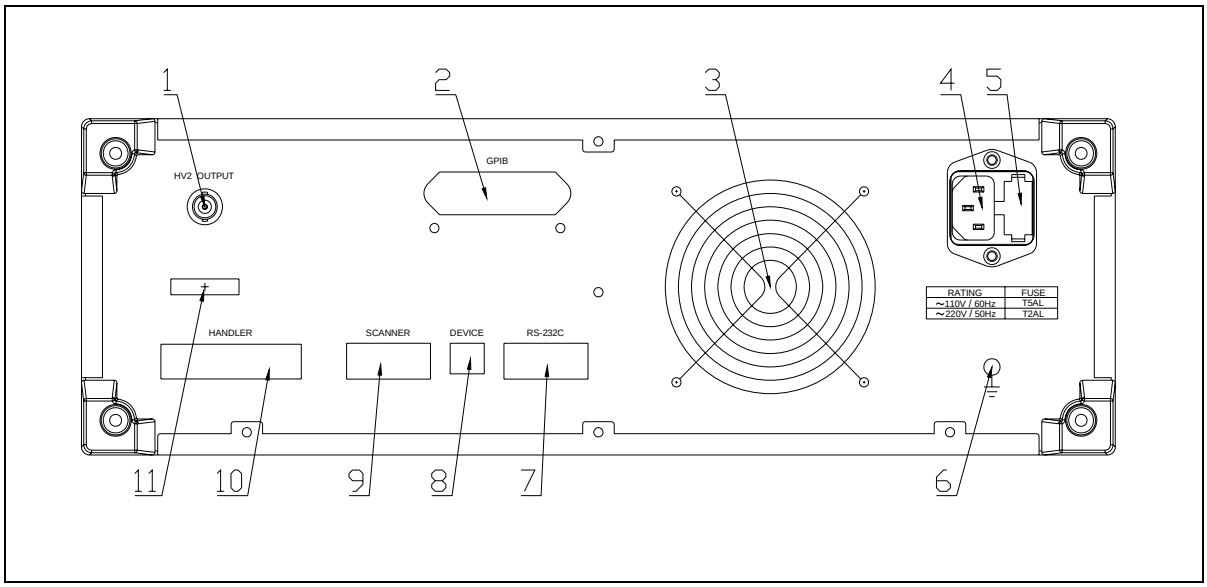

Figure 2-2 Rear Panel

Introduction to the rear panel is as follows:

Table 2-2 Introduction to the rear panel

No.	Name	Introduction
1	HV2 OUTPUT	HV2（-）: negative voltage output termninal ✓ Provide voltage output for charging.
2	GPIB interface (optional)	Provide the universal parallel communicagtion interface for instrument and external device. All parameter setup and command are set and obtained by computer to realize the romote control.
3	Fan window	Be used to dissipate heat and to maintain a normal working temperature for the instrument.
4	3-cable power socket✓	Choose and connect the 220V/50Hz or 110V/60Hz AC power.
5	Fuse socket	Hold the power fuse. Toggle the voltage input between 110V and 220V by changing the direction of the inner core.
6	Ground	Connect with the instrument cover to protect or shield the ground connection.

7	RS232C	Provide the universal serial communication interface for instrument and external device. All parameter setup and command are set and obtained by computer to realize the remote control.
8	DEVICE	PC can control TH2684 through the USB DEVICE interface.
9	SCANNER	The instrument can connect with a multi-channel scanner through this interface to realize a multi-channel test.
10	HANDLER	An automatic test system can be conveniently constructed via this interface to fulfill automatic tests. The instrument outputs bin compare result signals and handshake signals, meanwhile a “start-up” signal will also be sent to the instrument via it.
11	Lable plate	Record the date, model, manufacturer, etc.

2.3 Display zone

TH2684 adopts a 320×240 dot-matrix LCD. The display screen is divided into the following zones, as shown in figure 2-3.

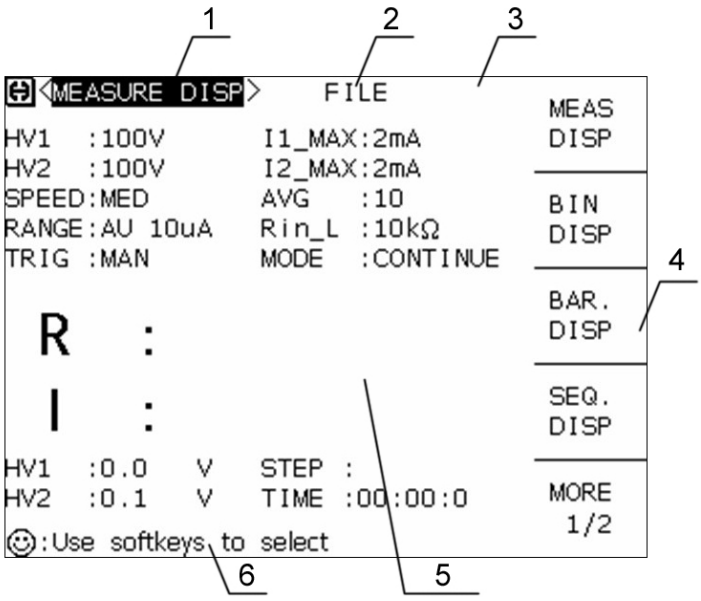

1) Main menu
   Indicate the name of the currently displayed page.
2) File
   When the cursor is moved to this zone, user can take operations of file manage, such as load, save and delete.
3) Tool
   Some functions not frequently used are listed in this setting zone.
4) Softkeys
   This zone displays the function of each softkey in each menu. The five keys have different functions in different menus.
5) Measurement result/ conditions
   Indicate the measurement result and the current conditions.
6) Prompt information
   Indicate all prompt information and the user-input data.

2.4 Main menu keys and their corresponding display pages

2.4.1 DISP

Press this key to enter into MEASURE DISP. The following items will be displayed in this page (select corresponding functions by softkeys, the same as belows).

<MEAS DISP>
<BIN DISP>
<SEQ. DISP>
<BAR. DISP>
<XY GRAPH>
<SCAN DISP>

2.4.2 SETUP

Press this key to enter into MEASURE SETUP. The following items will be displayed in the page:

<MEAS. SETUP>
<LIMIT SETUP>
<BAR. SETUP>
<SEQ. SETUP>
<XY SETUP>
<SCAN SETUP>
<USER ADJUST>

2.4.3 SYSTEM

Press this key to enter into SYSTEM SETUP. Fuctions such as system setup and file list can be started in this page. The following item will be displayed:

<SYSTEM SETUP>

2.5 Basic operations

Basic operations for TH2684 are as follows :

- Press [DISP], [SETUP] or [SYSTEM] and select softkeys to enter into the desired page to display (see figure 2-5).
- Move the cursor to the desired zone to set by pressing [←], [↑], [→] or [↓]. The selected zone will be displayed with highlight.
  Softkey functions corresponding to the currently selected zone will be displayed in the softkey zone. User can choose the desired function by pressing a softkey. Numerical keys, [BACKSPACE] and [ENTER] are used to input data.
  Once a numerical key is pressed, unit softkeys that can be used will be displayed in the softkey zone. You can press the unit softkey or [ENTER] to finish inputting. When [ENTER] is pressed to finish inputting, the unit will be the defaut unit corresponding to the current parameter, such as S, V or A.

2.6 Start-up

Connect the instrument to a 3-wire power socket.

NOTE: The instrument must be operated at the voltage of 90 V to 130 V AC(60Hz) or 198 V to 260V AC(50HZ).

Line wire (L), neutral wire (N) and earth ground (E) of the power socket should correspond to that of the instrument power plug.

Turn on the instrument by pressing the power switch on the bottom left corner of the front panel. The boot screen will be displayed.

Figure 2-4 shows the boot screen of TH2684 includinging our trade mark, instrument model (TH2684) and the software version (Ver 1.0.0).

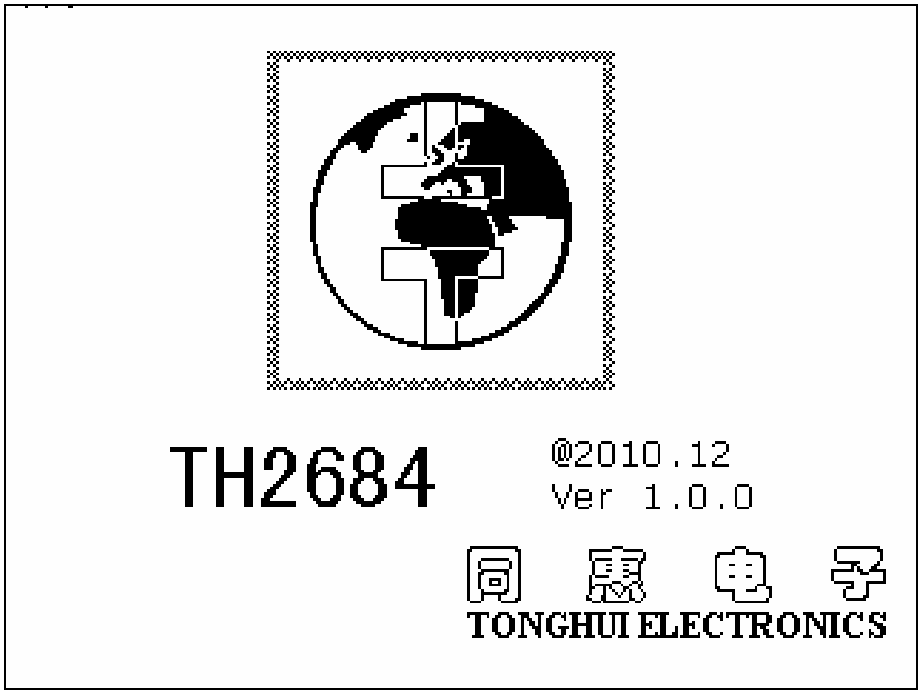

If the password protection is enabled, you will be required to input your password. After inputting your password, press [ENTER] to enter into the main menu page.

Note: This series of products have enabled password protection and the default password is 2684. You can reset the password by yourself. See the password function in the <SYSTME SETUP> page for more details.

Chapter 3 [DISP]

3.1 <MEASURE DISP>

Press [DISP] to enter into <MEASURE DISP>, as is shown in figure 3-1.

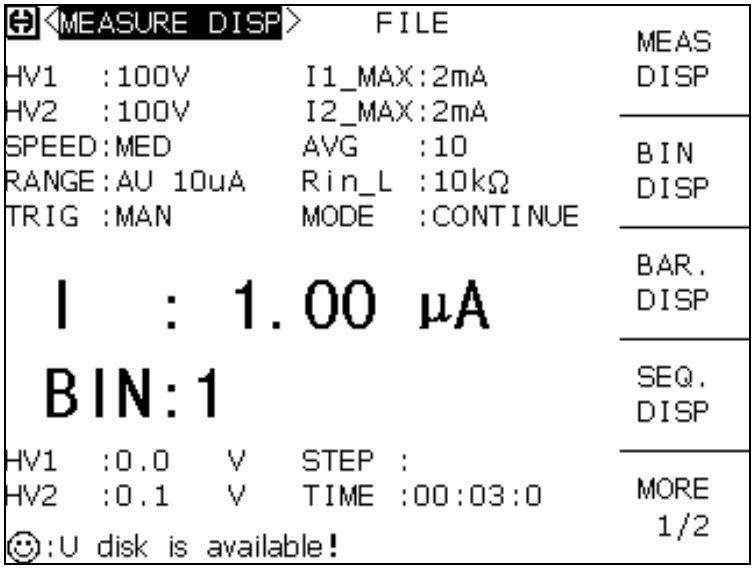

Figure 3-1 Measurement Display Page

The measurement result will be displayed in large character in this page. The following measurement parameters can be set in this page.

- Voltage 1 output （**HV1**）
- Maximum charge current: current 1（**I1_MAX**）
- Voltage 2 output （**HV2**）
- Maximum charge current: current 2（**I2_MAX**）
- Test speed （**SPEED**）
- Average number （**AVG**）
- Measuremen range （**RANGE**）
- Test internal impedance （**R in_L**）
- Trigger mode （**TRIG**）
- Test mode （**MODE**）
- File manage （**FILE**）

12 zones are displayed in this page: **MEASURE DISP**, **HV1**, **I1_MAX**, **HV2**, **I2_MAX**, **SPEED**, **AVG**, **RANGE**, **R in_L**, **TRIG**, **FILE**, **MODE.** Their specific descriptions will be dealt with later.

Follwing test conditions will be displayed in the measurement result/ conditions zone. These conditions can be set in <MEASURE SETUP> or <LIMIT SETUP>.

- R / I
- BIN number
- HV1
- HV2
- STEP
- TIME

NOTE: In <MEASURE DISP>, press [TEST] to start or stop the test;
press [HV] to sart or stop the high voltage output.

3.1.1 HV1

This function is used to set the voltage output of HV1.
Voltage setting ranges:

TH2684 : 10V –505V
TH2684A: 10V- 1005V

Operational steps for the HV1 setting:

1） Move the cursor to HV1, the following items will be displayed in the softkey zone.

- ↑(++)
  This is a coarse adjustment key to increase the voltage in accordance with the sequence of some common-used voltage points.Take TH2684A for example, the common-used voltage points are as follows: 10V，50V，100V，250V，500V，1000V，1005V.
- ↑(+)
  This key is is a fine adjustment key used to increase the voltage by 1V.
- ↓(-)
  This key is a fine adjustment key used to decrease the voltage by 1V.
- ↓(--)

This is a coarse adjustment key to decrease the voltage in accordance with the sequence of some common-used voltage points.Take TH2684A for example, the common-used voltage points are as follows: 10V，50V，100V，250V，500V，1000V，1005V.

2） User can use the softkeys to adjust the value of HV1 or the numerical keys to input the desired value of HV1. Voltage units (V) currently available will be displayed in the softkey zone when the numerical keys are used to input the voltage. Pressing the corresponding softkey, the voltage unit can be selected and the data will be confirmed. When [ENTER] is pressed to finish the data input, the default voltage unit is V.

3.1.2 I1_MAX

This function is used to set the maximum charge current allowable by HV1. Three currents are selectable: 2mA, 25mA and 200mA.

Operational steps for the I1_MAX setting:

1) Move the cursor to I1_MAX, the following items will be displayed in the softkey zone:
   - 2 mA
   - 25 mA
   - 200 mA
2) Press one of above softkeys to set the charge current.

3.1.3 HV2

HV2 output is available only on TH2684 but not on TH2684A.

This function is used to set the voltage (preset voltage) output of HV2. There are two voltage settings available: voltage independent mode (HV2 TRACK: OFF) and voltage track mode (HV2 TRACK: ON).

<1> Voltage setting in voltage independent mode(HV2 TRACK: OFF):

Voltage setting ranges:

TH2684 : 10V – 505V

HV2 is not available on TH2684A.

Operational steps for the HV2 setting:

1) Move the cursor to HV2, the following items will be displayed in the softkey zone:
   - ↑(++)
     This is a coarse adjustment key to increase the voltage in accordance with the sequence of some common-used voltage points.The common-used voltage points are as follows: 10V，50V，100V，250V，500V，505V.
   - ↑(+)
     This key is is a fine adjustment key used to increase the voltage by 1V.
   - ↓(-)
     This key is a fine adjustment key used to decrease the voltage by 1V.
   - ↓(--)
     This is a coarse adjustment key to decrease the voltage in accordance with the sequence of some common-used voltage points.The common-used voltage points are as follows: 10V，50V，100V，250V，500V，505V.

2）User can use the softkeys to adjust the value of HV2 or the numerical keys to input the desired value of HV2. Voltage units (V) currently available will be displayed in the softkey zone when the numerical keys are used to input the voltage. Pressing the corresponding softkey, the voltage unit can be selected and the data will be confirmed. When [ENTER] is pressed to finish the data input, the default voltage unit is V.

<2> Voltage setting in voltage track mode (HV2 TRACK: ON)

Voltage format: HV1 +/- offset voltage.
For example: HV1 + 1V.
Where, HV1 is the voltage of HV1;
+1 V means to add +1V to HV1.
Setting range for offset voltage:
TH2684: -10V ----- +10V, by a resolution of 0.1V.

Operational steps for the HV2 offset voltage setting:

1) Move the cursor to HV2, the following items will be displayed in the softkey zone:
   ↑ (+)
   This softkey is used to increase the offset voltage of HV2 by 0.1V.
   ↓ (-)
   This softkey is used to decrease the offset voltage of HV2 by 0.1V.

2）User can use the softkeys to adjust the value of HV2 offset voltage or the numerical keys to input the desired value of HV2 offset voltage. Voltage units (V) currently available will

be displayed in the softkey zone when the numerical keys are used to input the voltage. Pressing the corresponding softkey, the voltage unit can be selected and the data will be confirmed. When [ENTER] is pressed to finish the data input, the default voltage unit is V.

3.1.4 I2_MAX

This function is used to set the maximum charge current allowable by HV2. Three currents are selectable: 2mA, 25mA and 200mA.

Operational steps for the I2_MAX setting:

1）Move the cursor to I2_MAX, the following items will be displayed:

- 2 mA
- 25 mA
- 200 mA

2）Press one of above softkeys to set the charge current.

3.1.5 SPEED

Following factors decide the measurement speed of TH2684/A:

- Integration time (A/D conversion)
- Average times (Average test times)
- Measurement delay time (the time from instrument start-up to test starting)
- Display time of test result

At slow speed, the measurement results are generally much more stable and accurate.
Three measurement speed are selectable: FAST, MED and SLOW.

Operational steps for the measurement speed setting:

1）Move the cursor to SPEED, the following items will be displayed in the softkey zone:

- FAST
- MED
- SLOW

2）Press one of above softkeys to set the measurement speed.

3.1.6 Average (AVG)

TH2684/A can average results of two or more measurings. The average times ranges from 1 to 100 by a resolution of 1.

Operational steps for the average times setting:

1) Move the cursor to AVG, the following items will be displayed in the softkey zone:
   - ↑ (+)
     This key is used to increase the measurement average times.
   - ↓ (-)
     This key is used to decrease the measurement average times.
2) User can use above softkeys to set the average times, or numeric keys and [ENTER] to input it.

3.1.7 RANGE

By the DUT leakage current, the measurement range can be selected.

TH2684/A has 7 current measurement ranges:

Range 1mA : 10OuA – 1mA ;
Range 100uA : 10uA – 100uA ;
Range 10uA : 1uA – 10uA ;
Range 1uA : 100nA – 1uA ;
Range 100nA : 10nA – 100nA ;
Range 10nA : 1nA – 10nA ;
Range 1nA : 10pA – 1nA ;

NOTE: In EXT mode, the minimum current range of TH2684/A is 10nA and can not be switched to 1nA.

Operational steps for the measurement range setting:

1) Move the cursor to RANGE, the following items will be displayed in the softkey zone:
   - AUTO Set the range to AUTO mode.
   - HOLD Switch the range from AUTO mode to HOLD mode. In HOLD mode, the current measurement range will be locked and displayed in the RANGE zone.
   - ↑(+) In HOLD mode, this key is used to increase the range.
   - ↓(-) In HOLD mode, this key is used to decrease the range.

2) Use above softkeys to set the measurement range.

3.1.8 Rin_L

TH2684/A employs 10kΩ low input impedance when the current range is larger than 10nA; and 1MΩ internal impedance when the current range is less than 10nA, shown as follows:

Range 1 :10OuA – 1mA ;	input internal impedance	10 kΩ
Range 2 :10uA – 100uA ;	input internal impedance	10 kΩ
Range 3 :1uA – 10uA ;	input internal impedance	10 kΩ
Range 4 :100nA – 1uA ;	input internal impedance	10 kΩ
Range 5 :10nA – 100nA ;	input internal impedance	10 kΩ
Range 6 :1nA – 10nA ;	input internal impedance	1MΩ
Range 7 :10pA – 1nA ;	input internal impedance	1MΩ

NOTE:The input internal impedance of TH2684/A varies with the current range.

3.1.9 TRIG

TH2684/A has 3 trigger modes: MAN, EXT, BUS.

In MAN mode, TH2684/A makes a measurement by each press of [TEST].
In EXT mode, TH2684/A makes a measurement when the HANDLER interface receives a positive impulse trigger signal.
In BUS mode, TH2684/A makes a measurement when the IEEE488 interface receives a "**TRIGGER**" command. Bus mode can not be set on the front panel of the instrument.

NOTE: If a trigger signal is received by TH2684 in the phase of test, it will be ignored. Therefore, trigger signals can be sent to TH2684 when the test ends.
When the optional HANDLER interface is used to trigger TH2684, the trigger mode should be set to EXT mode.

Operational steps for the trigger mode setting:

The following operations can set the trigger mode (except BUS trigger mode). When the BUS trigger mode need to be set, a "**TRIGger:SOURce BUS**"command will be sent to the instrument via IEEE 488 interface.

1) Move the cursor to TRIG, the following items will be displayed in the softkey zone.
   - **MAN**
   - **EXT**
   - **BUS**
2) Above softkeys can set the instrument trigger mode.

NOTE: In EXT mode, the minimum current range is 10mA and cannot be switched to 1nA. In MAN or BUS mode, the minimum current range can be switched to 1nA.

3.1.10 MODE

TH2684/A has 2 test modes: SINGLE and CONTINUE.

In SINGLE mode and by pressing [TEST] one time, the instrument makes a test in the following sequence of trigger, charge, wait, test and end test.

In CONTINUE mode and by pressing [TEST], the instrument will make tests continuously; press [TEST] again, the instrument will exit the continue test mode.

Operational steps for the test mode setting:

1）Move the cursor to MODE, the following items will be displayed in the softkey zone:
   - **SINGLE**
   - **CONTINUE**

2）Above softkeys are used to set the instrument test mode.

3.1.11 FILE

See 5.2 for details about the <FILE MANAGE> function.

3.2 BIN DISP

Press [**DISP**] and select BIN DISP to enter into the <**BIN DISP**> page. In this page, the bin number will be displayed in large character and the current test result, in normal character, as is shown in figure 3-2.

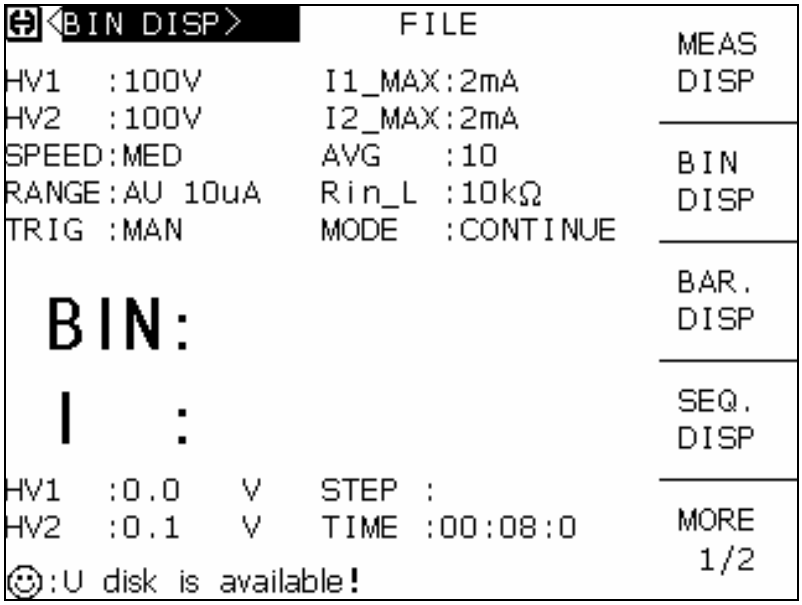

The main parameter settings in this page is the same as that of figure 3.1. What is different is that the measurement result is shown in nomal character.

NOTE: In <BIN DISP> page and pressing [TEST], the instruement will start or stop a test; pressing [HV], it will start or stop the high voltage output.

3.2.1 FILE

See 5.2 for details about the <FILE MANAGE> function.

3.3 BARGRAPH DISP

Press [**DISP**] and select BAR. DISP to enter into the <**BARGRAPH DISP**> page.
Bargraph display function is used to substitute and simulate the functions of multimeters.
Figure 3-3:

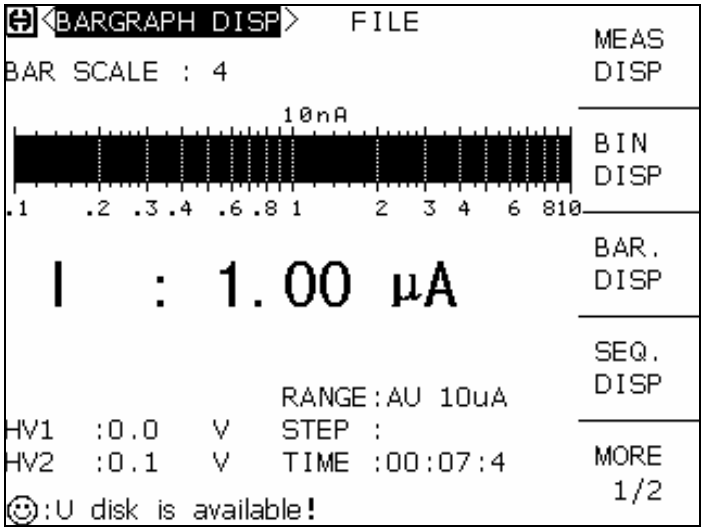

In this page, measurement result is displayed in bargraph format and large character. The following measurement control parameters can be set:

- **BAR SCALE**
- **FILE**

There are two control zones in this page: **BAR SCALE** and **FILE.** They will be dealt with later.

Following informations are present in the measurement result/ conditions zone:

- Bargraph display （R / I）
- Resistance/ current（R / I）
- BIN number （BIN）
- Range auto monitoring
- HV1
- HV2
- Measurement step monitoring (STEP)
- High voltage monitoring time (TIME)

NOTE: In <BARGRAPH DISP>, pressing [TEST], the instruement will start or stop a test; pressing [HV], it will start or stop the high voltage output.

3.3.1 BAR SCALE

TH2684/A has two bar scale settings: resistance and current, as follows:
Press [**SETUP**] and select RESULT, CURR should be chosen in the softkey zone. Move the cursor back to <**MEASURE SETUP**> and enter into the <**BARGRAPH SETUP**> page, the bar scale of the current range can be set.
When TH2684/A is in **CURR** mode, the setting range ranges from 0 to 8.

0 : AUTO SCALE (automatically select scale)
1 : 1pA – 100pA
2 : 10pA – 1nA
3 : 100pA – 10nA
4 : 1nA – 100nA
5 : 10nA – 1uA
6 : 100nA – 10uA
7 : 1uA – 100uA
8 : 10uA – 1mA

Press [**SETUP**] and select RESULT, RES should be chosen in the softkey zone. Move the cursor back to <**MEASURE SETUP**> and enter into the <**BARGRAPH SETUP**> page, the bar scale of the resistance range can be set.
When TH2684/A is in **RES** mode, the setting range ranges from 0 to 10.

0 : AUTO SCALE (automatically select scale)
1 : 10kΩ - 1 MΩ
2 : 100kΩ - 10 MΩ
3 : 1MΩ - 100 MΩ
4 : 10MΩ - 1GΩ
5 : 100MΩ - 10GΩ
6 : 1GΩ – 100GΩ
7 : 10GΩ – 1TΩ
8 : 100GΩ – 10TΩ
9 : 1TΩ – 100TΩ
10 : 10TΩ – 1PΩ

Operational steps for the bar scale setting:

1) Move the cursor to BAR SCALE, the following items will be displayed in the softkey zone:

- ↑(+) This softkey is used to increase the bar scale number ranging from 0 to 8.
- ↓(-) This softkey is used to decrease the bar scale number ranging from 0 to 8.

2） User can input the desired bar scale number by numeric keys and press [ENTER] to end inputting.

NOTE: Switching the output result (resistance or current), the bar scale number will reset to 0, that is to select the scale automatically.

3.3.2 FILE

See 5.2 for details about the <FILE MANAGE> function.

3.4 SEQUENCE DISP

Press [**DISP**] and select SEQUENCE DISP to enter into the <**SEQUENCE DISP>** page shown in figure 3-4.

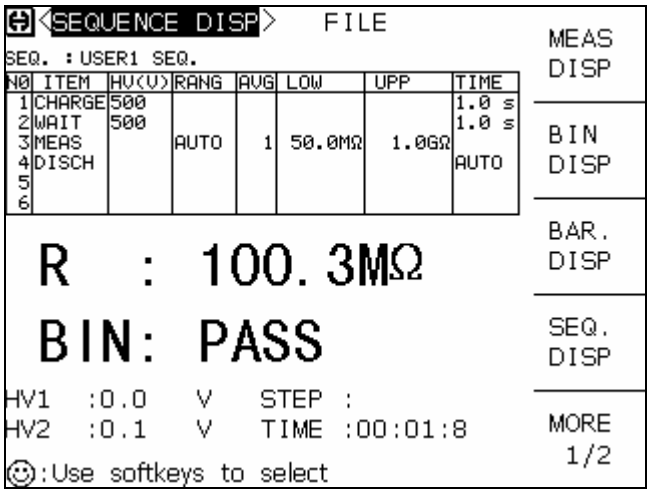

The zone that can be set in this page is:

- **FILE**

NOTE: In <SEQUENCE DISP>, pressing [TEST], the instruement will start or stop a test; pressing [HV], it will start or stop the high voltage output.

3.4.1 FILE

See 5.2 for details about the <FILE MANAGE> function.

3.5 XY GRAPH

[**DISP**] → MORE 1/2→ XY GRAPH→ <**XY GRAPH**>

Figure 3-5 displays a XY curve tested with no load, where, the shape of the curve is affected by the environment.

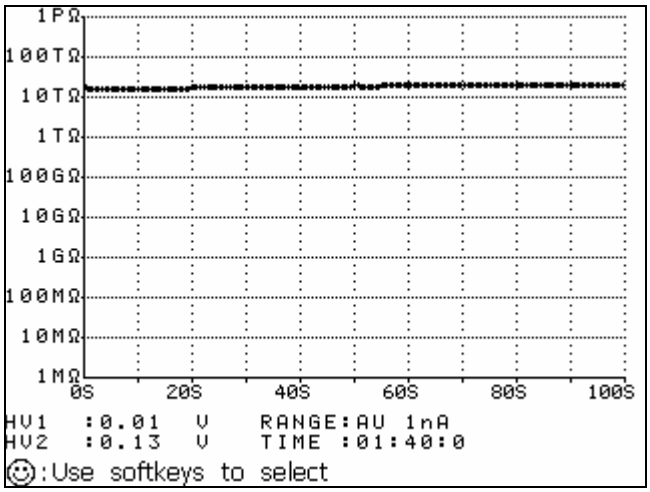

This page is a single display page which can be set in the <XY SETUP> page.

NOTE: In <XY CURVE DISP>, pressing [TEST], the instruement will start or stop a test; pressing [HV], it will start or stop the high voltage output.

3.6 SCAN DISP

[**DISP**] → MORE 1/2→ SCAN DISP→ <**SCAN DISP**>

Figure 3-6 shows a scan display page:

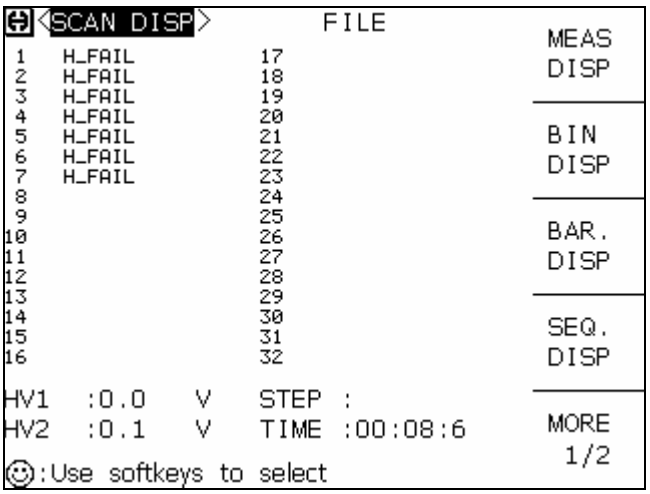

This page is a single display page which can be set in the <SCAN SETUP> page.

The zone that can be set in this page is:

- **FILE**

NOTE: In <SCAN DISP>, pressing [TEST], the instruement will start or stop a test; pressing [HV], it will start or stop the high voltage output.

3.6.1 FILE

See 5.2 for details about the <FILE MANAGE> function.

Chapter 4 [SETUP]

4.1 <MEASURE SETUP>

Press [SETUP] to enter into the <MEASURE SETUP> page.

Figure 4-1:

```
<MEASURE SETUP>   FILE   TOOLS
                                          MEAS.
HV1   :100V        I1_MAX:2mA             SETUP
HV2   :100V        I2_MAX:2mA
SPEED:MED          AVG    :10             LIMIT
RANGE:AUTO         Rin_L  :10kΩ           SETUP
TRIG  :MAN         MODE   :CONTINUE
RESULT            :RESISTANCE             BAR.
HV2 TRACK         :OFF                    SETUP
DISCHARGE         :OFF
MEASURE DELAY     :100mS                  SEQ.
CHARGE TIME       :100mS                  SETUP
HUM REJECT        :50Hz
CONTACT CHECK     :OFF                    MORE
                                           1/2
☺:Use softkeys to select
```

The following parameters can be set on <**MEASURE SETUP**>.

- HV1 output （**HV1**）
- I1 maximum charge current（**I1_MAX**）
- HV2 output （**HV2**）
- I2 maximum charge current（**I2_MAX**）
- Test speed （**SPEED**）
- Average times （**AVG**）
- Measure range （**RANGE**）
- Measure input internal impedance （**R in_L**）
- Trigger mode （**TRIG**）
- Test mode （**MODE**）
- Measure result （**RESULT**）
- HV2 track （**HV2 TRACK**）
- Discharge setup （**DISCHARGE**）

- Measure delay （**MEASURE DELAY**）
- Charge time （**CHARGE TIME**）

Some programmable zones in the <**MEASURE SETUP**> page are the same as that in the <**MEASURE DISP**> page as shown below. See previous chapter for details about those programmable zones.
The other programmable zones in the <MEASURE SETUP> page will be specifically dealt with in the following paragraphs.

- HV1 output （**HV_1**）
- I1 maximum charge current（**I1_MAX**）
- HV2 output （**HV2**）
- I2 maximum charge current（**I2_MAX**）
- Test speed （**SPEED**）
- Average times （**AVG**）
- Measure range （**RANGE**）
- Measure input internal impedance （**R in_L**）
- Trigger mode （**TRIG**）
- Test mode （**MODE**）

4.1.1 RESULT

TH2684/A has two types of result display: CURR（current）, RES (resistance).

If RES is selected, the measure result will show the resistance value.
If CURR is selected, the measure result will show the current value.

Operational steps for the measure result display setting:
1）Move the cursor to **RESLUT**, the following items will be displayed in the softkey zone:

- **RES**
- **CURR**

2) Use above softkeys to set the mesure result display.

4.1.2 HV2 TRACK

This function is exclusive to TH2684 and not available to TH2684.

Two modes are available to the HV2 output of TH2684: independent mode (OFF) and track mode (ON).

When the mode is set to independent mode (turn the track function off), the voltage of HV2 will be output independently and can be set to any value.
When the mode is set to track mode (turn the track function on), HV2 will track HV1. User can make fine adjustment on the basis of HV1. The range is between -10V and 10V.

NOTE: When the HV2 track mode is changed, the setting position of HV2 will change accordingly.

Operational steps for the HV2 TRACK setting:
1）Move the cursor to HV2 TRACK, the following items will be displayed in the softkey zone:

- **ON**
- **OFF**

2) Use above softkeys to set HV2 TRACK to ON or OFF.

4.1.3 DISCHARGE

When the test is finished, TH2684/A can be set to turn on or off the discharge function.

NOTE: This function is only applicable to single mode.

Operational steps for the DISCHARGE setting:
1）Move the cursor to **DISCHARGE**, the following items will be displayed in the softkey zone:

- **ON**
- **OFF**

2) Use above softkeys to set the DISCHARGE function to ON or OFF.

4.1.4 MEASURE DELAY

TH2684/A can set the MEASURE DELAY function.
MEASURE DELAY is the wait time from the end of charge to the beginning of the test.
The function is mainly used to decrease the interference caused by switching relays, and to increase the measure accuracy.
In order to damp the effect of noise, the time a measurement costs equals a period of the power frequency. By a switch with the frequency of 50/60Hz, user can set the measurement time to 20msec or 16 2/3msec.

Ranges: 0S – 1000S
0mS – 1000mS, by a resolution of 10mS.
0S – 1000S, by a resolution of 1S.

Operational steps for the MEASURE DELAY setting:

1）Move the cursor to MEASURE DELAY, the following softkeys are displayed:

↑ (+)

It increases the measure delay time.
By each press of this key, the time increases 10mS (when the unit is mS) or 1S (when the unit is S).

↓ (-)

It decreases the measure delay time.
By each press of this key, the time decreases 10mS (when the unit is mS) or 1S (when the unit is S).

2）Softkeys or numerical keys can be used to set the measure delay time.

When the numerical keys are used to input the desired measure delay time, the following softkeys are displayed.

- msec
- sec

Above softkeys are applied to select the time unit and to end inputting.
When [ENTER] is used to confirm inputting, the default unit is S.

4.1.5 CHARGE TIME

The charge time on TH2684/A can be set.
This function can ensure capactive components are charged rapidly and speed the test.
If CHARGE TIME is set, the input amplifier will be shorted by a 1Ωresistance.

When charge time, measure delay and trigger are set, charge will be displayed before test, that is, the test step (STEP) will be displayed in the sequence of CHARGE, WAIT, TEST.

NOTE: This function is available only in single measure mode.

Range: 0S – 1000S
0mS –1000mS, by a resolution of 10mS.
0S – 1000S, by a resolution of 1S.

Operational steps for the CHARGE TIME setting:

1）Move the cursor to CHARGE TIME, the following softkeys are displayed:

↑ (+)

It increases the charge time.
By each press of this key, the time increases 10mS (when the unit is mS) or 1S (when the unit is S).

↓ (-)

It decreases the charge time.
By each press of this key, the time decreases 10mS (when the unit is mS) or 1S (when the unit is S).

2）Softkeys or numerical keys can be used to set the charge time.

When the numerical keys are used to input the desired charge time, the following softkeys are displayed.

- **msec**
- **sec**

Above softkeys are applied to select the time unit and to end inputting.
When [ENTER] is used to confirm inputting, the default unit is S.

4.1.6 HUM REJECT

For the difference of enternal source, it is essential to toggle the power frequency so as to ensure the test accuracy. The power frequency can be toggled between 50Hz (the default frequency) and 60Hz.

Operational steps for the HUM REJECT setting:

1）Move the cursor to **HUM REJECT**, the following softkeys are displayed:

- **50Hz**
- **60Hz**

2）Use above softkeys to set the power frequency.

4.1.7 CONTACT CHECK

This function can judge whether capacitive materials like capacitors, cables, contact with the instrument well, thus reducing the occurance of inaccurate test. Contact check won't increase any test time.

When this function is turned on and the instrument is in test mode, **NO CONTACT** instead of resistance or current will be displayed if no capacitive component is detected.
When this function is turned off, the instrument will make no judgement on capacitive components but directly test the value.

Operational steps for the contact check setting:

1）Move the cursor to **CONTACT CHECK**, the following softkeys are displayed:

- **ON**
- **OFF**

2) Use above softkeys to set the contact check to ON or OFF.

4.2 LIMIT SETUP

Press **[SETUP]**, and **LIMIT SETUP** to enter into the **<LIMIT SETUP>** page.

Figure 4-2:

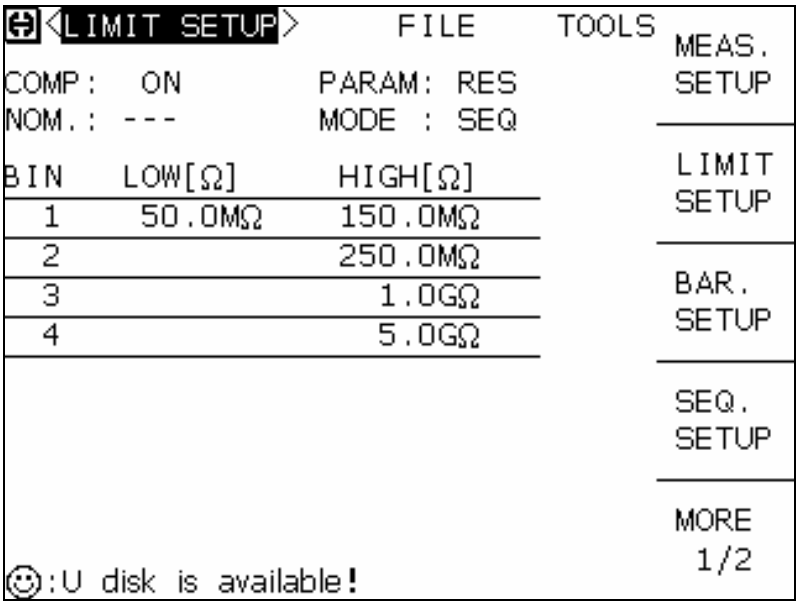

Comparator function and 4 bin limits can be set on this page. The result can be divided into up to 5 bins (from BIN1 to BIN5). If TH2684 has installed a HANDLER interface and is used in an automatic test sorting system, the comparator function will be quite useful. Limit parameters in comparator function can be set only in the **<LIMIT SETUP>** page.

NOTE: Comparator function is only usable in <MEASURE DISP>, <BARGRAPH DISP> and <BIN DISP> pages.

Programmable parameters:

- Comparator function: ON/OFF (**COMP**)
- Measure parameters（**PARAM**）
- Nominal value（**NOM**）
- Comparator function limit mode（**MODE**）
- Low limit of each bin（**LOW**）
- High limit of each bin（**HIGH**）

4.2.1 COMP: ON/OFF

TH2684/A can set limits for 4 bins. The measure result can be divided into up to 5 bins (from BIN1 to BIN2). If TH2684 has installed a HANDLER interface and is used in an automatic test sorting system, the comparator function will be quite useful.

NOTE: Comparator function is only usable in <MEASURE DISP>, <BARGRAPH DISP> and <BIN DISP> pages.

Operational steps for comparator function ON/OFF:

1) Move the cursor to **COMP**, the following softkeys will be displayed.
   - **ON**
   - **OFF**
2) Use above softkeys to set the comparator function ON or OFF.

4.2.2 Limit mode of compare function

Compare function provides two modes as shown in figure 4-2-1.

- Tolerance mode
  Set the tolerance value of nominal value (nominal value is set in the **NOM** zone) as compare limit value. There are two modes: one is percentage tolerance (% TOL) and the other is absolute value (ABS TOL).
- Sequential mode
  The test range is set as compare limit value. The compare limit value must be set based on the sequence from small to large.

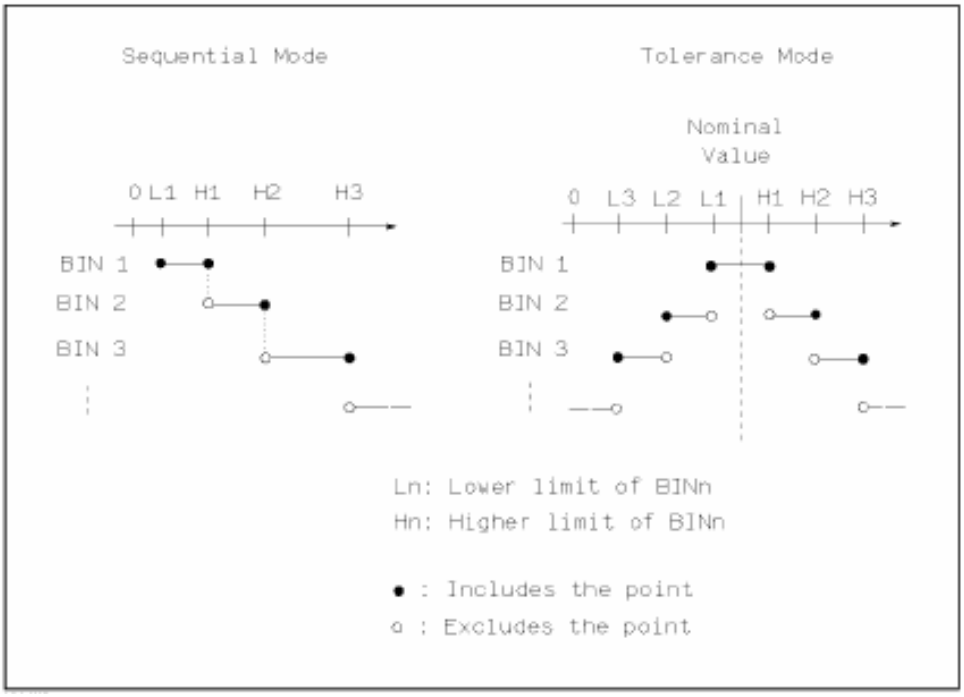

Figure 4-2-1 Tolerance mode and sequential mode

NOTE: When setting limit value of tolerance mode, the range should be from small to large. If the tolerance range of BIN1 is the largest, all DUTs will be sorted to BIN1.

In tolerance mode, the limit range of each bin can be discontinuous or overlapped. The low limit is not necessary less than the nominal value and the high limit is not necessary greater than the nominal value.

Operational steps for setting the limit mode of compare function:

1) Move the cursor to **MODE**, the following softkeys are displayed:
   - **% TOL**
     The key is used to set the limit mode as percentage tolerance mode.
   - **ABS TOL**
     The key is used to set the limit mode as absolute tolerance mode.
   - **SEQ MODE**
     The key is used to set limit mode as sequential mode.
2) Use above softkeys to set the limit mode.

4.2.3 Setting nominal value

In tolerance mode, it is necessary to set the nominal value. In the display range, it can be set to any value.
In sequential mode, the nominal value is not necessary but can be set.
Operational steps for setting nominal value:

1) Move the cursor to **NOM**.
2) Press numerical keys to input the nominal value. Units (**pA**, **nA**, **μA**, **mA**) or (**kΩ, MΩ, GΩ, TΩ, PΩ**), corresponding to the parameter, will be displayed in the softkey zone. You can select the desired unit to end inputting. When [ENTER] is used to finish inputting, the default unit is the same as that input last time. When the ***1** softkey is used to input the nominal value, A or Ω can be selected as the default unit.

4.2.4 High and low limits

TH2684/A can set the limits for 4 bins. The test result is sorted to 5 bins at most (from BIN1 to BIN5). High and low limits can be set in **HIGH** and **LOW** zones from BIN1 to BIN5.

Operation steps for setting high and low limits:

1) Set **PARAM**, **NOM.** and **MODE**.
2) Move the cursor to **TOOLS**, press **CLEAR TABLE** to clear the current bin limits.
3) Move the cursor to LOW of bin1. If you select tolerance mode, execute step 4 to step 5; if you select sequential mode, execute step 6 to step 10.
4) Use numerical keys to input the low limit value of Bin1, after inputting data, use (**pA**, **nA**, **μA**, **mA**) or (**kΩ, MΩ, GΩ, TΩ, PΩ**) to replace **[ENTER]** to input the limit unit. When use **[ENTER]** to end inputting, the default unit is the same as that input last time.After inputting limit value of bin1, the low limit of bin1 is set as – (absolute limit), high limit of bin1 is + (absolute limit).

NOTE: When the tolerance mode is selected as ABS TOLE, corresponding usable units will be displayed in the softkey zone; when the tolerance mode is selected as % TOL, no softkeys will be displayed and user can only use **[ENTER]** to confirm inputting.

---

5) The cursor is jumped to **LOW** of bin2. Repeat step 4 until limit values of bin4 are input.
6) Use numerical keys to input the low limit of bin1, after inputting data, use (**pA**, **nA**, **μA**,

mA) or (**kΩ, MΩ, GΩ, TΩ, PΩ**) to replace **[ENTER]** to input the limit unit. When use **[ENTER]** to end inputting, the default unit is the same as that input last time.

7) After inputting the low limit value of bin1, the cursor is jumped to **HIGH** of bin1. Input the high limit of bin1.
8) The cursor is jumped to **HIGH** of bin2. As the limit mode of compare function is sequential mode, the low limit of bin2 is equal to the high limit of bin1. Input the high limit of bin2.
9) The cursor is jumped to **HIGH** of bin3. Input the high limit of bin3.
10) The cursor is jumped to **HIGH** of bin 4. Input the high limit of bin4. The settings for high and low limits are done.

4.2.5 File manage

See 5.2 for details about the <FILE MANAGE> function.

4.2.6 TOOLS

The clear table function can clear all limit parameters.When the limit mode is changed, user must use the clear table function to clear all limit parameters shown in the current page.
Operational steps for clearing limit parameters in the <LIMIT SETUP> page.

1) Move the cursor to **TOOLS**, the following softkey will be displayed:
   - **CLEAR TABLE**
2) Press this softkey to clear all limit parameters in the current page.

4.3 BARGRAPH SETUP

Press **[SETUP]**, and then **BAR. SETUP** to enter into the **<BARGRAPH SETUP>** page.
Figure 4-3:

```
<BARGRAPH SETUP>  FILE
BAR SCALE : 0
  0 :     AUTO SCALE
  1 :   10kΩ -    1MΩ
  2 :  100kΩ -   10MΩ
  3 :    1MΩ - 100MΩ
  4 :   10MΩ -    1GΩ
  5 :  100MΩ -   10GΩ
  6 :    1GΩ - 100GΩ
  7 :   10GΩ -    1TΩ
  8 :  100GΩ -   10TΩ
  9 :    1TΩ - 100TΩ
  10:   10TΩ -    1PΩ
☺:U disk is available!
```

MEAS. SETUP

LIMIT SETUP

BAR. SETUP

SEQ. SETUP

MORE 1/2

In the **<BARGRAPH SETUP>** page, the following control parameters can be set in this page:

- BAR SCALE （**Select the serial number**）
- FILE

4.3.1 BAR SCALE

There are two bar scale setups: RES (resistance) and CURR (current).

In **CURR** mode, the setting range is from 0 to 8.

0 ： AUTO SCALE (automatically select the scale)
1 ： 1pA – 100pA
2 ： 10pA – 1nA
3 ： 100pA – 10nA
4 ： 1nA – 100nA
5 ： 10nA – 1uA
6 ： 100nA – 10uA
7 ： 1uA – 100uA
8 ： 10uA – 1mA

In **RES** mode, the setting range is from 0 to 10.

0 ： AUTO SCALE (automatically select the scale)
1 ： 10kΩ - 1 MΩ
2 ： 100kΩ - 10 MΩ
3 ： 1MΩ - 100 MΩ
4 ： 10MΩ - 1GΩ
5 ： 100MΩ - 10GΩ
6 ： 1GΩ – 100GΩ
7 ： 10GΩ – 1TΩ
8 ： 100GΩ – 10TΩ
9 ： 1TΩ – 100TΩ
10 ： 10TΩ – 1PΩ

Operational steps for setting bar scale:

1) Move the cursor to **BAR SCALE**, the following softkeys will be displayed:
   - ↑(+) This key is used to increase the serial number of bar graph.
   - ↓(-) This key is used to decrease the serial number of bar graph.

3) The numerical keys can be used to input the serial number of bar graph. **[ENTER]** is used to confirm inputting.

NOTE: When the output result (resistance or current) is toggled, the serial number of bar scale will reset to 0 (auto scale).

4.3.2 FILE

See 5.2 for details about the <FILE MANAGE> function.

4.4 SEQUENCE SETUP

Press **[SETUP]**, and then **SEQ. SETUP** to enter into the **<SEQUENCE SETUP>** page.
Figure 4-4:

```
<SEQUENCE SETUP>  FILE
SELECTED SEQ. : USER1 SEQ.
DEFAULT SEQ.:
  20 SEC SEQ.
  60 SEC SEQ.
  20 SEC MEAS. GO
  60 SEC MEAS. GO
User SEQ.:
  USER1 SEQ.
  USER2 SEQ.
  USER3 SEQ.
  USER4 SEQ.
☺:U disk is available!
```

MEAS. SETUP
LIMIT SETUP
BAR. SETUP
SEQ. SETUP
MORE 1/2

SEQUENCE SETUP is mainly used to set parameters in the **SEQUENCE DISP** page.

The following control parameters can be set in the <SEQUENCE SETUP> page:

- Select the sequence number （**SELECTED SEQ.**）
- DEFAULT SEQ.
- User SEQ.
- FILE

4.4.1 SELECTED SEQ.

It is used to select the reference test sequence for the **<SEQUENCE DISP>** page.

Two test sequences are available: default sequence and user sequence.

Operational steps for selecting a sequence:

1) Move the cursor to **SELECTED SEQ**., the following softkeys will be displayed:
   - 20 SEC SEQ.
   - 60 SEC SEQ.
   - 20 SEC MEAS.
   - 60 SEC MEAS

- MORE1/2

2) Press a softkey to select the desired sequence. If the desired sequence is not displayed in the current display page, press MORE 1/2 to display the following softkeys.
   a) USER1
   b) USER2
   c) USER3
   d) USER4
   e) MORE 2/2
3) If the desired sequence is missed, repeat step1 and step 2 until the desired sequence is selected.

4.4.2 DEFAULT SEQ.

Parameters of default sequence can be scanned or copied but cannot be changed.
Including: 20 SEC SEQ.
60 SEC SEQ.
20 SEC MEAS. GO
60 SEC MEAS. GO

Introduction to default sequences:
（1）When one of the first two default sequences is selected, the meaure will executed in continuous mode defined in the <SEQUENCE SETUP> page. At 20s or 60s, the measure will stop and DUT will automatically discharge.
（2）When “Measure to Go” is selected, the measure will stop and DUT starts discharging as soon as the low limit is met. At 20s or 60s, if the low limit cannot be met, the measure will stops like that happens at 20 SEC SEQ. or 60 SEC SEQ..

Operational steps for setting the default sequence:
1） Move the cursor to **DEFAULT SEQ.**, the following softkeys will be displayed:

- **EDIT**

Press **EDIT** to enter into the **<SEQ. CONTENT>** page.In this page, only high and low limits can be set, see 4.5.7 HIGH, LOW. Other parameters can only be scanned.

- **COPY**

Press this key, the instrument will copy all parameters in the current page to the memory, but only the latest contents can be copied.

4.4.3 USER SEQ.

User sequences are ones edited by user. At any time, user can change any parameter.
There are 4 user sequences:

USER1 SEQ.
USER2 SEQ.
USER3 SEQ.
USER4 SEQ.

Above sequences have functions of EIDT, COPY, PASTE and CLEAR.
User can set 18 timing steps at most.

Operational steps for setting user sequence:

1）Move the cursor to **USER SEQ**., the following softkeys will be displayed.

- **EDIT**
  Press **EDIT** to enter into the **<SEQ. CONTENT>** page. Parameters in this page can be set, see 4.5 <SEQ. CONTENT> .
- **COPY**
  Press this key, the instrument will copy all parameters in the current page to the memory, but only the latest parameters can be copied.
- **PASTE**
  Press this key, all parameters under this user sequence will be covered by that stored in the memory.
- **CLEAR**
  Press this key to clear all contents under the current user sequence.

4.4.4 FILE

See 5.2 for details about the <FILE MANAGE> function.

4.5 SEQ. CONTENT

Move the cursor to a default or user sequence, press **SCAN** or **EDIT** to enter into the **<SEQ. CONTENT>** page.

Figure 4-5:

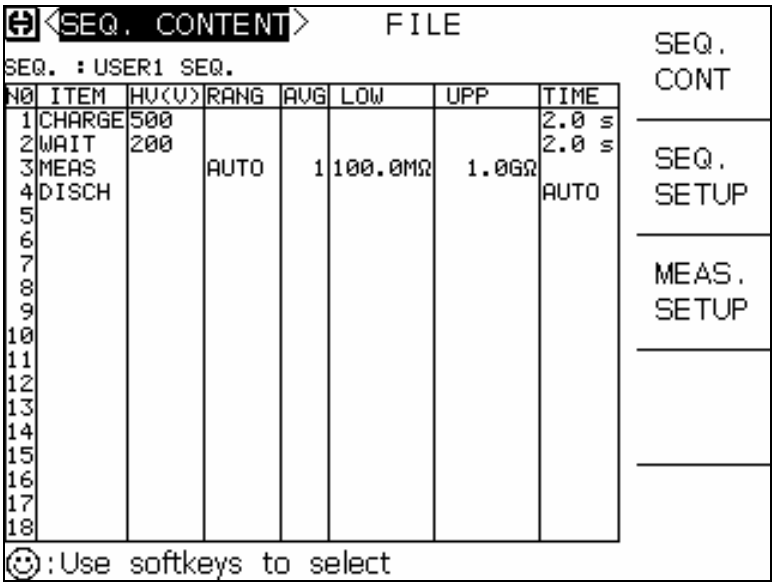

This page is used to edit the current user sequence, and up to 18 steps can be set.

Following items can be set: (1) NO., (2) ITEM, (3) HV, (4)RANG, (5)AVG, (6)LOW, UPP, (7)TIME.

NOTE: DEFAULT SEQ. are automatically generated in accordance with settings of <MEASURE DISP> or <MEASURE SETUP>.

USER SEQ. are set in this page and not concerned with <MEASURE SETUP> and <LIMIT SETUP>.

4.5.1 Basic test theory and specifictaions

TH2684/A can be programmed to run a sequence of measurements after being triggered from the keyboard or remotely.
The measurements can be compared with limits and set the bin out siganals to appprove or reject the device under test. In order to avoid some of the pitfalls associated with this, especially when testing capacitors, a basic understanding of the functions of the megohmmeter is required.

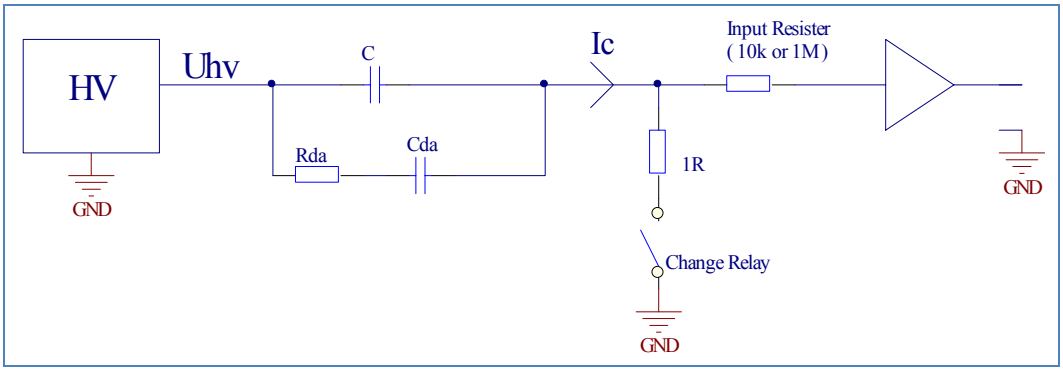

Figure 4.5.1 Test Schematic Diagram

Figure 4.5.1 shows the HV supply and the input stage of the current amplifier. The test object is a capacitance.

First, the capacitance is charged, the start current limited by the current limit setting of the HV supply. In order to speed up charging and to protect the current amplifier, the charge relay short circuits the input during charging.The charge relay is controlled by an internal signal ILIM which is high when the output current of the HV suppply is larger than 2mA.In sequence mode, the charge relay remains activated if the preset charge time exceeds the time it takes for the current to fall below 2mA. (the charge relay is active until both ILIM is reset and charge time has expired.) The charge relay is also activated during discharge.

When measuring capacitance the effect of “dielectric absorption” must be considered. This effect is also referred to as “soaking”. It can be described with the equivalent shown in Fig. 4.5.1. Cds will typically have a value of 0.1-1% of C and the time constant of Rda and Cda will be app. 1-10sec. This means that after C has been fully charged a current larger than the leakage current will flow into the capacitor. However, just after the charge relay is deactivated the absorption current is delivered by the main capacitance and the current amplifier measures

a very small value. 1 to 3 seconds later the absorption current is measured. It is clear that care has to be taken when planning the timing of the sequence.

The figure below shows a typical sequence when measuring the leakage current (or IR) of a foil capacitor with dielectric absorption.

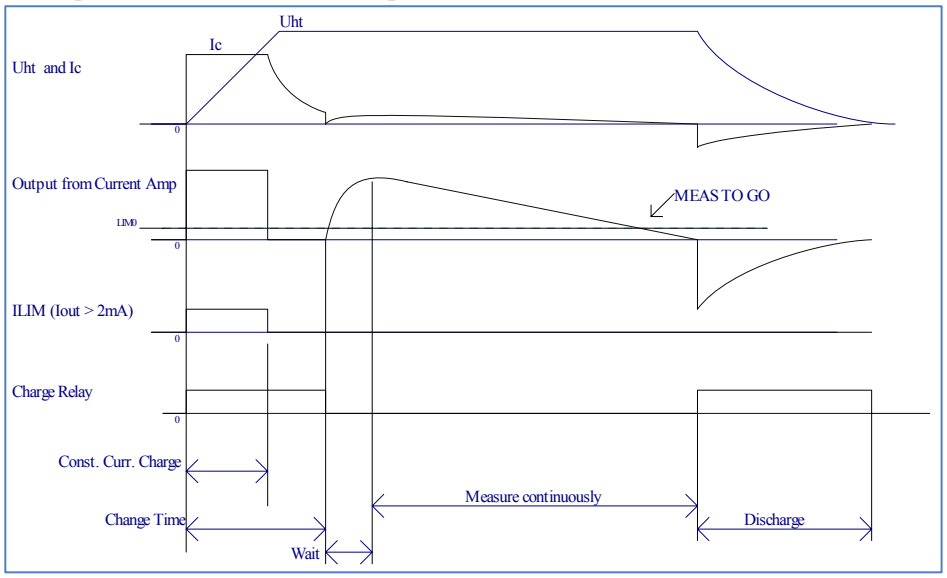

The charge relay is activated during the preset charge time, which is longer than it takes for the current to fall below 2mA. When the charge time expires, the charge relay is deactivated. Immediately after this the measured current is very low (and hence the calcutlated resistance very high), but in the period after the absorption current begins to flow through the capacitor. To avoid premature approval of a component measurement should be started until typ. 1-3sec. after the charge relay has been deactivated.

4.5.2 ITEM

Seven sequence commands are available:

- CHARGE
- WAIT
- MEASURE
- MEAS. CONT.
- MEAS. TO GO

- ◆ DISHARGE
- ◆ FLASH TEST

Operational steps for selecting sequence command:

(1). Move the cursor to **ITEM**, the following softkeys will be displayed:

- ■ CHARGE
- ■ WAIT
- ■ MEASURE
- ■ MEAS. CONT.
- ■ MORE 1/2

(2). Press a softkey to select a sequence command. If the desired softkey is not displayed in this page, press MORE 1/2 to display the following softkeys:

- ■ MEAS. TO GO
- ■ DISCHARGE
- ■ FLASH TEST
- ■ MORE 2/2

(3). If the desired sequence command is missed, repeat step 1 and step 2.

NOTE: Sequence commands must be set one by one in accordance with NO.. If the sequence commands are set by jumping one NO., the test will be ended at the jumped NO..

4.5.2.1 CHARGE

Function: This command is used to charge DUTs.

Realization: A 1 Ω resistor is used to short the input amplifier.

Input parameters: (1) HV

(2) TIME

Current chage time is generally determined by the below formula:

$$T_{LIMT} = \frac{C.U}{I_{LIM}}$$

Where I_{LIM} is the charge current limit.

The charge current limit can be set in the corresponding current zone of <MEASURE DISP> or <MEASURE SETUP>.
Three charge current limits are available: 2mA, 25mA, 200mA.

4.5.2.2 WAIT

Function: Wait without comparing the measurements with limits.
Realization: Continue to charge the DUT (a 10kΩ or 1MΩ input impdedance).
Input parameters: (1) HV
(2) TIME

4.5.2.3 MEASURE

Function: Make a single measurement.
Input parameters: (1) RANGE
(2) AVG
(3) LOW
(4) HIGH
(The time is automatically set and varies with test speed and average times)

During the test, the display of PASS/ FAIL will change after the low or the high limits is set.

NOTE: User can decide to set the HIGH/ LOW limit or not.
If both limits or either one are set, TH2684/A will automaticall switch on the compare function.
Likewise, if both limits are not set, the compare function will be automatically switched off.

4.5.2.4 MEAS. CONT.

Function: Measure continuously (similar to the earlier WAIT except range, average times, limits that can be specified.)

Input parameters: （1） HV
(2) RANG
(3) AVG
(4) LOW
(5) HIGH
(6) TIME

During the test, the display of PASS/ FAIL will change after the low or the high limits is set.

NOTE: User can decide to set the HIGH/ LOW limit or not.
If both limits or either one are set, TH2684/A will automaticall switch on the compare function.
Likewise, if both limits are not set, the compare function will be automatically switched off.

4.5.2.5 MEAS. TO GO

Function: Measure continuously until limit is met, then stop and discharge.

Input parameters:（1） RANG
（2） AVG
(3) LOW
(4) HIGH
(5) TIME

If the limit is not met the sequence will continue until the set time.

During the test, the display of PASS/ FAIL will change after the low or the high limits is set.

NOTE: Both limits or either one must be set. The test will terminate and an error prompt will be displayed when both limits are not set.

4.5.2.6 DISCHARGE

Function: Turn off HV and discharge DUT (internal 2kΩ).
Input parameter: (1) TIME

If 0sm/0s is set, AUTO discharge function will be selected. This will dischage the DUT until the voltage is below 0.4V.

4.5.2.7 FLASH TEST

Function: Measure current, if the current exceeds the high limit, then stop and reject the DUT.
Input parameter: （1） RANG
(2) LOW
(3) HIGH
(4) TIME

This instruction is intended to register flash-over at extended voltage.

NOTE: 1. In flash test, the limit mode can only be set to the current mode; and even in resistance mode, only the current mode can be set.
2. The high limit must be set, or the test will terminate and an error prompt will be displayed.

4.5.3 NO.

Operational steps for setting NO.:
1 > Move the cursor to the corresponding **NO.**, the following softkeys will be displayed:

- **DELETE**
  Delete all data corresponding to the current NO. and the data in the next line will be uplifted to the current line.
- **INSERT**
  Insert a blank line and uplift the data in the next line.

2> Use above softkeys to achieve relative operations.

4.5.4 HV

Voltage setting range: TH2684: 10 ---- 500V
TH2684A: 10-----1000V

NOTE: Whether set HV or not depends on the selected sequence command.

Operational steps for setting HV in the sequence content page:

1）Move the cursor to **HV**, the following softkeys will be displayed:

- ↑(++)
  This is a coarse adjustement softkey used to increase the voltage in accordance with the sequence of some common-used voltage points. The common-used voltage points are as follows: 10V，50V，100V，250V，500V，1000V.
- ↑(+)
  This is a fine adjustment softkey used to increase the voltage by 1V.
- ↓(-)
  This is a fine adjustment softkey used to decrease the voltage by 1V.
- ↓(--)
  This is a coarse adjustement softkey used to decrease the voltage in accordance with the sequence of some common-used voltage points. The common-used voltage points are as follows: 10V，50V，100V，250V，500V，1000V.

2）User can use the softkeys to adjust the value of HV or the numerical keys to input the desired HV value. Currently available voltage units (V) will be displayed in the softkey zone when the numerical keys are used to input the voltage.Pressing the corresponding softkey, the voltage unit can be selected and the data will be confirmed. When [ENTER] is pressed to finish the data input, the default voltage unit is V.

4.5.5 RANG

The ranges in <SEQ. CONTENT> are as follows:

AUTO : auto range. In range of 1nA to 10nA, the input internal impedance is 1MΩ; and in other ranges, it is 10kΩ.

1mA	:	10OuA – 1mA ;	input internal impedance 10kΩ
100uA	:	10uA – 100uA ;	input internal impedance 10 kΩ
10uA	:	1uA – 10uA ;	input internal impedance 10 kΩ
1uA	:	100nA – 1uA ;	input internal impedance 10 kΩ
100nA	:	10nA – 100nA ;	input internal impedance 10 kΩ
10nA	:	1nA – 10nA ;	input internal impedance 1MΩ
1nA	:	10pA – 1nA ;	input internal impedance 1MΩ

Operational steps for setting the range in the sequence content page:

1）Move the cursor to **RANG**, the following softkeys will be displayed:

↑ (+)

This softkey is used to increase the range in accordance with the sequence listed above.

↓ (-)

This softkey is used to decrease the range in accordance with the sequence listed above.

2）Select the corresponding softkey to set the range.

4.5.6 AVG

Setting range: 1 – 100.

Operational steps for setting the average times in the sequence content page:

1）Move the cursor **AVG**, the following softkeys will be displayed:

- ↑ (+)

  Use this key to increase the average times.

- ↓ (-)

  Use this key to decrease the average times.

2）Use above softkeys to select the average times or numerical keys and [ENTER] to input the desired average times.

4.5.7 LOW, HIGH

Low and high limits in the sequence content page can be set to current or resistance limits, which depends on **[RESULT]** in the **<MEASURE SETUP>** page. An exceptional case is in FLASH TEST, it can only be set to current limits.

If **[RESULT]** displays CURRENT, it can only be set to current limits, on the contrary is resistance limits.

NOTE:

1. User can decide to set the HIGH/ LOW limit or not.
   If both limits or either one are set, TH2684/A will automatically switch on the compare function.
   Likewise, if both limits are not set, the compare function will be automatically switched off.
2. In test modes of MEASURE and MEAS. CONT, HIGH/ LOW limits are not necessary.
3. In test modes of MEAS. TO GO, FLASH TEST, HIGH/ LOW limits must be set or the test will terminate and an error prompt will be displayed.

Operations steps for setting LOW, HIGH limits int the sequence content page:

1） Move the cursor to **LOW** and **UPP**, the following softkeys will be displayed:

If the limit mode is in current mode:

- pA
- nA
- uA
- mA

If the limit mode is in resistance mode:

- kΩ
- MΩ
- GΩ
- TΩ
- PΩ

2）Use numerical keys and above softkeys to input low and high limits.

NOTE: No matter in current mode or resistance mode, the low limit must be less than the

high limit.

4.5.8 TIME

This zone is used to the time required by each step.

Operational steps for setting the time in the sequence content page:

1）Move the cursor to **TIME**, the following items will be displayed:

- ↑（+）
  This softkey is used to increase the time. By each press of this key, the time increases 10ms (when the unit is ms) or 1s (when the unit is s).
- ↓（-）
  This softkey is used to decrease the time. By each press of this key, the time decreases 10ms (when the unit is ms) or 1s (when the unit is s) .

Use above softkeys to set the time, or numerical keys and **[ENTER]** to input the desired time. By the latter way, when ms is selected and the input time is not a multiple of 10, TH2684/A will set the time to a value that approximate to a multiple of 10; when 0ms or 0s is selected, TH2684/A will set the time to AUTO. If [ENTER] is used to end inputting, the default unit is s.

4.5.9 FILE

See 5.2 for details about the <FILE MANAGE> function.

4.6 XY GRAPH SETUP

Press **[SETUP]**, and then **more 1/2** and **XY SETUP** to enter into the **<XY GRAPH SETUP>** page.

Figure 4-6:

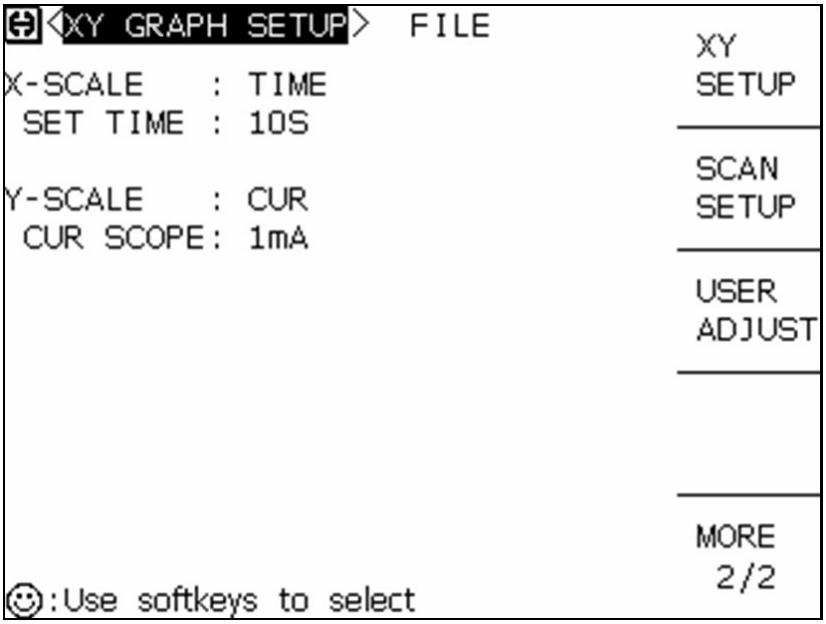

The following parameters can be set in the <XY GRAPH SETUP> page:

- Select the X-scale (X-SCALE)
- Set time (SET TIME)
- Select the Y-scale (Y-SCALE)
- Current scope (CUR SCOPE)

4.6.1 X-SCALE

Select the X-scale of the XY graph.

Operational steps for selecting the x-scale :

1）Move the cursor to **X-SCALE**, the following softkeys will be displayed:

- **TIME**

2) Use above softkeys to set the x-scale.

4.6.2 SET TIME

When the **X-SCALE** is selected as time, this function can set the total test time.
Time range: 1 – 1000s

Operational steps for selecting the time:

1）Move the cursor to **SET TIME**, the following softkeys will be displayed:

- ↑（+）
  This softkeys is used to increase the total test time by 1s.
- ↓（-）
  This softkey is used to decrease the total test time by 1s.

2） Use above softkeys to set the total test time, or numerical keys and **[ENTER]** to input the time. By the latter way, the default unit will be s.

4.6.3 Y-SCALE

Operational steps for setting the Y-scale:

1）Move the cursor to **Y-SCALE**, the following softkeys will be displayed:

- **RES**
- **CUR**

2) Use above softkeys to set the Y-scale.

4.6.4 CUR SCOPE

Current scope shows the maximum current display range.

Operational steps for setting the current scope:

1) Move the cursor to **CUR SCOPE**, the following softkeys will be displayed:

- 1mA
- 100uA
- 10uA
- 1uA
- MORE 1/2

2) Use above softkeys to select the current scope. If the desired softkey is not displayed in the current page, press **MORE 1/2** to show mo re softkeys.

a) 100nA
b) 10nA
c) 1nA
d) 100pA
e) MORE 2/2

3） If the desired current scope is missed, repeat step 1 and step 2 to select the desired one.

4.6.10 FILE

See 5.2 for details about the <FILE MANAGE> function.

4.7 SCAN SETUP

Press **[SETUP]**, and then **MORE 1/2** and **SCAN SETUP** to enter into the **<SCAN SETUP>** page.

Figure 4-7:

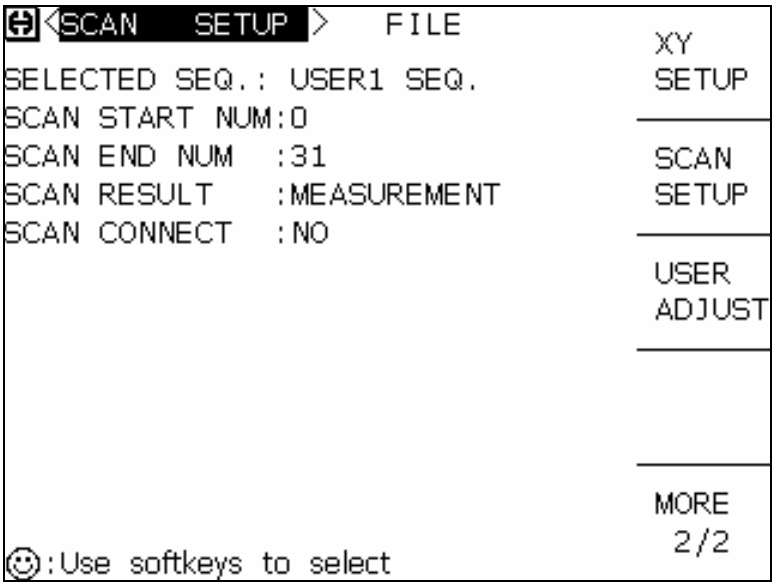

The following parameters can be set in the **<SCAN SETUP>** page:

- SELECTED SEQ.
- SCAN START NUM
- SCAN END NUM
- SCAN RESULT
- SCAN CONNECT

4.7.1 SELECTED SEQ.

Items in this sequence is the same as that in <SEQ. SETUP>.

Operational steps for setting sequence:

1）Move the cursor to **SELECTED SEQ.**, the following softkeys will be displayed.

- 20 SEC SEQ.

- 60 SEC SEQ.
- 20 SEC MEAS.
- 60 SEC MEAS
- MORE 1/2

2）Use above softkeys to select the sequence. If the desired softkey is not displayed in the current page, press **MORE 1/2** to show mo re softkeys.

- USER1
- USER2
- USER3
- USER4
- MORE 2/2

3）If the desired sequence is missed, repeat step1 and step 2 to select the desired one.

4.7.2 SCAN START NUM

There are 32 scan channels at most and the number ranges from 0 to 31.

Operational steps for setting the scan start number:

1）Move the cursor to **SCAN START NUM**, the following softkeys will be displayed:

- ↑（+）
  This softkey is used to increase the scan start number by 1.
- ↓（-）
  This softkey is used to decrease the scan start number by 1.

2）Use above softkeys to set the scan start number, or numerical keys and **[ENTER]** to input the desired one.

4.7.3 SCAN END NUM

There are 32 channels at most and scan number ranges from 0 to 31.

Operational steps for setting the scan end number:

1）Move the cursor to **SCAN END NUM**, the following softkeys will be displayed:

- ↑（+）
  This softkey is used to increase the scan number by 1.
- ↓（-）

This softkey is used to decrease the scan number by 1.

2）Use above softkeys to set the scan end number, or numerical keys and **[ENTER]** to input the desired one.

NOTE: The scan start number must be less than the scan end number.

4.7.4 SCAN RESULT

This zone is used to set the result display as MEASUREMENT or PASS/ FAIL.

Operational steps for setting the scan result display mode:

（1）Move the cursor to **SCAN RESULT**, the following softkeys will be displayed:

■ MEASUREMENT

This softkey is used to set the display mode as measurement.

■ PASS/ FAIL

This softkey is used to set the display mode as PASS/ FAIL.

（2）Use above softkeys to set the scan result display mode.

4.7.5 SCAN CONNECT

This zone is used to check the scanner is connected correctly or not.

Operational steps for setting scan connect:

（1）Move the cursor to **SCAN CONNECT**, the following softkey will be displayed:

■ MEASURE

This key is used to start up the measurement that whether the scanner is connected correctly or not.

（2）Use the above softkey to start up measure.

If YES is displayed, the scanner is connected correctly.

If NO is displayed, the scanner is not connected correctly.

4.7.6 FILE

See 5.2 for details about the <FILE MANAGE> function.

4.8 USER ADJUST

Press [SETUP], and then MORE 1/2 and USER ADJUST to enter into the <USER ADJUST> page.

Figure 4-8:

```
USER ADJUST>        FILE                XY
                                        SETUP
OPEN CORR:  OFF
   1mA    : NO    100uA  : NO           SCAN
   10uA   : NO    1uA    : NO           SETUP
   100nA  : NO    10nA   : NO
   1nA    : NO    ALL    : NO
LOAD CORR:   ON                         USER
REFERENCE:  ------     : NO             ADJUST

                V1m =
                V2m =
                Im  =
                Rm  =                   MORE
                                         2/2
☺:Use softkeys to select
```

In this page, the following parameters can be set:

- OPEN CORR
- Current range for open correction (1mA...)
- LOAD CORR
- REFERENCE
- FILE

4.8.1 OPEN CORR：ON/OFF

This function sets whether to take the open correction value into account when the measure is taken..

OPEN CORR: ON Take the open correction value into account.

OPEN CORR: OFF Do not take the open correction value into account.

Operational steps for switching on or off open correction:

（1）Move the cursor to **OPEN CORR**, the following softkeys will be displayed:

■ ON

This softkey is used to switch on the open correction function.

■ OFF

This softkey is used to switch off the open correction function.

（2） Use above softkeys to switch on or off the open correction.

4.8.2 OPEN CORR

This function corrects single range or all ranges.

The following ranges can be corrected:

1mA : Correct in the range of 1mA.
100uA : Correct in the range of 100 μ A.
10uA : Correct in the range of 10 μ A.
1uA : Correct in the range of 1 μ A.
100nA : Correct in the range of 100nA.
10nA : Correct in the range of 10nA.
1nA : Correct in the range of 1nA.
ALL : Correct all ranges one times.

Operational steps for setting open correction:

（1）Move the cursor to a range below **OPEN CORR**, the following softkeys will be displayed:

■ APPLY

This softkey is used to execute the open correction in a specific range.

When the correction is successfully done, **[YES]** will be displayed behind the range; or **[NO]** will be displayed.

■ CLEAR

This softkey is used to clear the open correction data in a specific range.

When the clear operation is successfully done, **[NO]** will be displayed behind the range; if the correction data is also present, **[YES]** will be displayed.

（2） Use above softkeys to set the open correction.

4.8.3 LOAD CORR: ON/ OFF

LOAD CORR: ON Take the open correction value into account.
LOAD CORR: OFF Do not take the open correction value into account.

Operational steps for switching on or off the loac correction function:

（1）Move the cursor to **LOAD CORR**, the following softkeys will be displayed:

- ON This key is used to switch on the load correction.
- OFF This key is used to switch off the load correction.

（2） Use above softkeys to switch on or off the load correction.

4.8.4 REFERENCE

In this zone, the correction reference value can be input, and the load correction can be enabled and cleared.

Operational steps for inputting the reference value:

Move the cursor to REFERENCE, and input the desired data. In the softkey zone, units **pA**, **nA**, **μA**, **mA** or **kΩ, MΩ, GΩ, TΩ, PΩ** will be displayed, press a key to select the desired unit and end inputting. When [ENTER] is used to finish inputting, the default unit is A or Ω.

Operational steps for setting reference:

（1）Move the cursor to **REFERENCE**, the following softkeys will be displayed:

- START
  In load correction mode, this key is used to start up HV and test, and to display voltage, current and resistance.
- APLLY
  This key is used to confirm, record and calculate the load correction coefficient.
- CLEAR
  This softkey is used to clear the load correction coefficient.
- STOP
  This softkey is used to turn off the voltage and to end the test.

（2） Use above softkeys to set the reference.

4.8.5 FILE

See 5.2 for details about the <FILE MANAGE> function.

Chapter 5 [SYSTEM]

5.1 <SYSTEM SETUP>

Press [SYSTEM], then [SYSTEM SETUP] to enter into the <SYSTEM SETUP> page.
Figure 5-1:

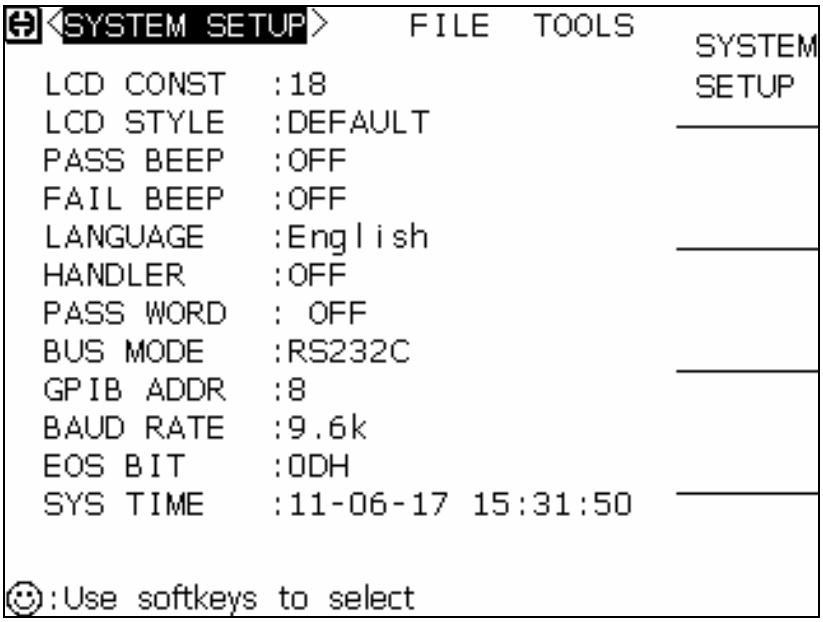

This page includes LCD contrast, beeper, alarm, language, password, bus mode, bus address, etc.

5.1.1 L CD contrast

In this zone, the LCD contrast is controlled and displayed.
Operational steps for setting LCD contrast:
Move the cursor to **LCD CONST**, the following softkeys will be displayed:

- ↑ (+)
  This softkey is used to increase contrast.
- ↓ (-)

This softkey is used to decrease contrast.

5.1.2 LCD Style

In this zone, the LCD style is controlled.

Operational steps for setting the LCD style:

Move the cursor to **LCD STYLE**, the following softkeys will be displayed:

- **CLASSIC**
  This softkey is used to set the LCD style to classic display mode.
- **DEFAULT**
  This softkey is used to set the LCD style to default mode.

5.1.3 Pass beeper

Set the pass beep mode.

Operational steps for setting the pass beeper:

Move the cursor to **PASS BEEP**, the following softkeys will be displayed:

- **HIGH LONG**
  This softkey is used to set a high and long beep.
- **HIGH SHORT**
  This softkey is used to set a high and short beep.
- **LOW LONG**
  This softkey is used to set a low and long beep.
- **TWO SHORT**
  This softkey is used to set two short beep.
- **OFF**
  This softkey is used to turn off pass beeper.

5.1.4 Fail beeper

Set the fail beep mode.

Operational steps for setting the pass beeper:

。 Move the cursor to **FAIL BEEP**, the following softkeys will be displayed:

- **HIGH LONG**

This softkey is used to set a high and long beep.

- **HIGH SHORT**
  This softkey is used to set a high and short beep.
- **LOW LONG**
  This softkey is used to set a low and long beep.
- **TWO SHORT**
  This softkey is used to set two short beep.
- **OFF**
  This softkey is used to turn off fail beeper.

5.1.5 Language

This softkey is used to set the language mode.

Operational steps for setting the language mode.

Move the cursor to **LANGUAGE**, the following softkeys will be displayed:

- **English**
  This softkey is used to set the operation language as English.
- 中文
  This softkey is used to set the operation language as Chinese.

5.1.6 Handler

Switch on or off the handler.

Operational steps for setting the handler:

Move the cursor to **HANDLER**, the following softkeys will be displayed:

- **ON**
  This softkey is used to switch on the handler.
- **OFF**
  This softkey is used to switch off the handler.

5.1.7 Password

Set the password protection mode.

Operational steps for setting the password protection:

Move the cursor to **PASS WORD**, the following softkeys will be displayed:

- **OFF**
  This softkey is used to turn off the password protection function.
- **LOCK SYSTEM**
  This softkey is used to turn on the password protection function, including file protection and boot password.
- **MODIFY**
  This softkey is used to modify the password. The instrument will prompt user to input old password, new password and to confirm the new password until the modification is done.

NOTE: The default password for TH2684 is 2684.

5.1.8 Bus mode

Set RS232C interface or GPIB interface as the interface bus. See **chapter 8 Remote Control** for details.

Operational steps for setting the bus mode:

1) Move the cursor to **BUS MODE**, the following softkeys will be displayed:
   - **RS232C**
   - **GPIB**
   - **USBTMC**
   - **USBCDC**
2) Press **RS232C** to select RS232C interface bus.
3) Press **GPIB** to select GPIB interface bus.

NOTE: GPIB mode cannot be set until the GPIB optional is purchased from our company and installed.

---

4) Press **USBTMC** to select USBTMC interface bus.
5) Press **USBCDC** to select USBCDC interface bus.

5.1.9 GPIB address

Set the GPIB interface bus address.

Operational steps for setting the bus address:

Move the cursor to **GPIB ADDR**, the following softkeys will be displayed:

- ↑ (+)
  This softkey is use to increase the native GPIB address.
- ↓ (-)
  This softkey is use to decrease the native GPIB address.

5.1.10 Baud rate

Set the baud rate on a specified RS232 interface ranging from 9.600k to 115.200k.

Operational steps for setting the baud rate:

Move the cursor to **BAUD RATE**, the following softkeys will be displayed:

- ↑ (+)
  This softkey is used to increase the native baud rate.
- ↓ (-)
  This softkey is used to decrease the native baud rate.

5.1.11 Time

Set the correct local time.

For example: 9 o'clock 13 minute and 25 second a.m. on June 19, 2011 will be shown as 11-06-19 09:13:25.

Input the time by numerical keys and press [ENTER] to confirm.

Pressing the right and the left arrow keys on the keyboard, the cursor will toggle among different time zones.

5.2 <FILE MANAGE>

TH2684 series can save parameters that are set by user to the internal non-volatile memory in file format. User can load the file to use these parameters instead of reseting.
This section will introduce the information about the function of Save/ Recall.
Notation explanation:
E: Abbreviation of External, representing external memory, like U disk.
I: Abbreviation of Internal, representing internal memory, like internal Flash of TH2684.

Introduction to Save/ Recall

By the function of save/recall, user can save measurement results and configuration information to TH2684 internal Flash or external U disk; meanwhile user can recall data from TH2684 internal Flash or external U disk.
Save and function:
Table 5-2-1 shows the applicable save methods and applications:

Table 5-2-1

Save		Recall?	Function
Type	Format		
Configuration save (Internal Flash)	*.STA	Yes	Save the configuration status of TH2684 to internal Flash.
Configuration save (External U disk)	*.STA	Yes	Save the configuration status of TH2684 to external U disk.
Data save (External U disk)	*.CSV	No	Save the test result to external U disk.
Screen save (External U disk)	*.BMP	No	Save the screen picture of TH2684 to external U disk.

Folder/ structure in U disk

It is suggested that user should build a file and folder, shown as table 5-2-2. If user wants to save the file to the new folder, enter the folder firstly then operate.

Table 5-2-2 Folder in U disk

Folder	The max. file	Description
CSV	999	Include the test result such as *.CSV file.
STA	999	Include the configuration information, such as *.STA file.
BMP	20	Include the screen picture , such as *.BMP file.

Note: The folder of CSV, STA and BMP can be automatically generated when U disk is connected to TH2684.

Folder/ File structure in U disk is shown as figure 0-1:

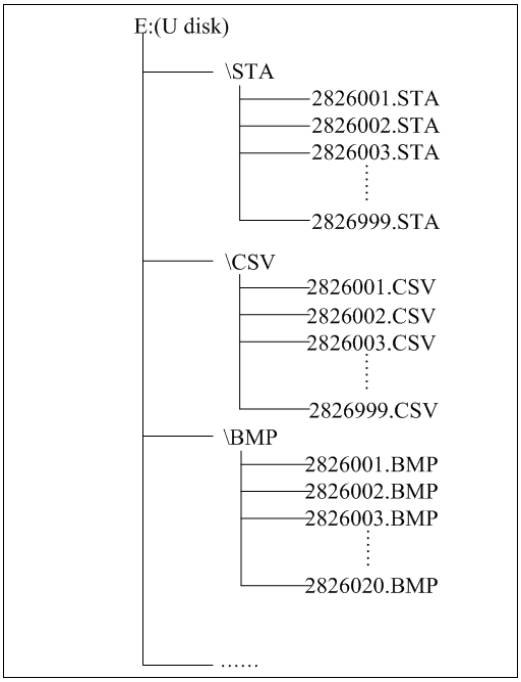

Figure 0-1 File structure in U disk

When using a U disk on TH2684, you should pay special attention to the following points:

1. Use a U disk with the USB2.0 interface.

2. The U disk file system should be FAT16 or FAT32. FAT16 or FAT32 should be used to format the U disk. If the U disk memory exceeds 512M, it is recommended to use FAT32 standard to format the disk.

3. Before a U disk is connected to TH2684, you are recommended to save the data on it and Tonghui will not be liable for the data loss.

5.2.1 *.STA

The instrument can save 20 groups of *.STA file.

Use the FILE MANAGE function in **FILE** menu, the following data will be saved or loaded in the form of file, which is called *.STA.

- Page save
- Parameters in <MEASURE SETUP>:
  - HV1
  - HV2
  - HV2 fine adjustement voltage
  - I 1_MAX
  - I 2_MAX
  - SPEED
  - Timer interval
  - AVG
  - RANGE
  - R in_L
  - TRIG
  - MEASURE DELAY
  - MEASURE DELAY unit
  - CHARGE TIME
  - CHARGE TIME unit
  - RESULT
  - HV2 TRACK
  - DISCHARGE
  - HUM REJECT
  - CONTACT CHECK
- Parameters in <LIMIT SETUP>:
  - COMP
  - PARAM
  - NOM.
  - MODE
  - LOW/ HIGH
- Parameters in <BARGRAPH SETUP>:
  - BAR SCALE
- Parameters in <SEQUENCE SETUP>:
  - SELECTED SEQ.

- DEFAULT SEQ.
- SCAN or EDIT

■ Parameters in <SEQ. CONTENT>:

- various commands and parameters

■ Parameters in <XY GRAPH SETUP>:

- X-SCALE
- SET TIME
- Start voltage
- End voltage
- Interval
- Step
- Y-SCALE
- MEASURE MODE
- Nominal
- CUR SCOPE

■ Paramters in <SCAN SETUP>:

- SELECTED SEQ.
- SCAN START NUM
- SCAN END NUM
- SCAN RESULT

5.2.2 Operational steps for file manage

A. Check the existed file:

Press **FILE** and then **FILE MANAGE** to enter into the **<FILE MANAGE>** page. User can switch in "I：(Internal file list)" and "E:(External file list)"by[←] [→]. Use [↑] [↓] to check one by one.

Internal file list is shown as figure 0-2.

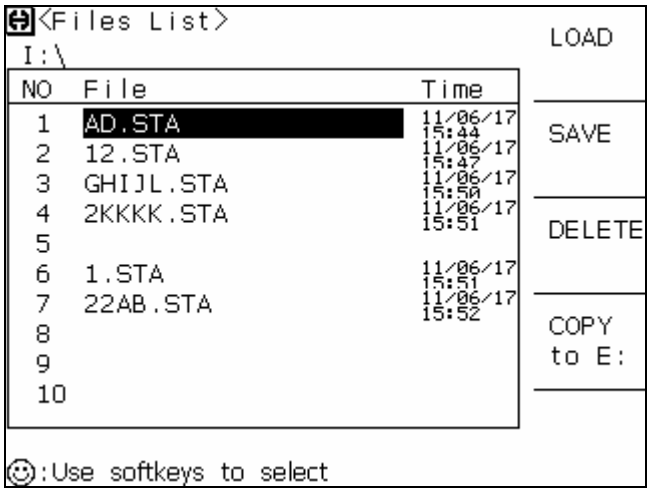

Figure 0-2

External file list is shown as figure 0-3.

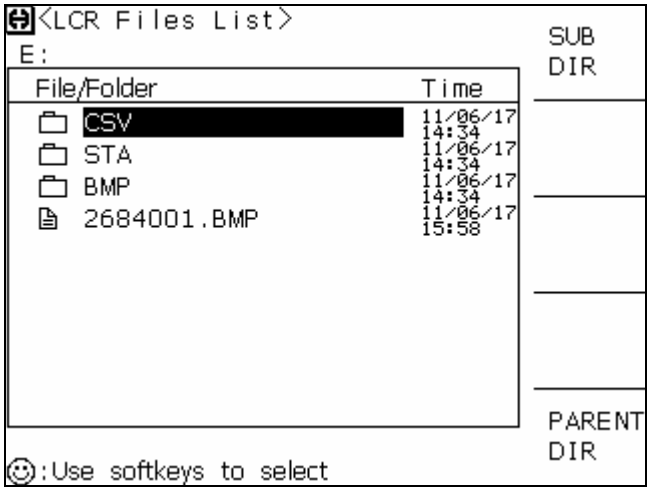

Figure 0-3

In figure 0-3, CSV, STA and BMP are folders; 2684001.BMP is a file.

B. Load the existed file (*.STA) to the instrument:

(1) Move the cursor the the file to be loaded;

(2) When the LOAD softkey is pressed, the instrument will display a prompt information "Are your sure load NO.? (Note: NO. is the file number, similarly hereinafter)"

(3) Press YES to load the selected file, or NO not to load the file.

C. Save the current instrument setup to a memory:

(1) Move the cursor to the file to to be saved;

(2) When the SAVE softkey is pressed, the instrument will display a prompt information

"Are you sure save NO.?".

(3) Press YES to save the selected file, or NO not to save the file.

(4) Input the file name by the keyboard and press **[ENTER]**, the configuration information about the instrument is saved in the current file.

NOTE:

1. In the external file operation page, users are recommended to enter E:\STA directory to save configuration information. Ways to enter subdirectory will be dealt with in the later introduction to the basic operations of folder.

2. In the external file operation page, when the SAVE softkey is pressed, if a file has already existed where the cursor is locating, the instrument will save the configuration information to the file corresponding to the input file name, but the original file will not be covered by the new file.

3. In the internal file operation page, when the SAVE softkey is pressed, if a file has already existed where the cursor is locating, the instrument will save the configuration information to the file corresponding to the input file name, and the original file will be covered by the new file.

4. Notes for keyboard input: When a numerical key is pressed, the corresponding letters controlled by this key will be shown in the softkey zone. User can press a softkey to choose the desired letter; double-press a numerical key will input the corresponding numerical number.

D. Delete the current file

(1) Move the cursor the file to be deleted;

(2) When the DELETE softkey is pressed, the instrument will display a prompt information Are you sure delete NO.?

(3) Press YES to delete the selected file, or NO not to delete the file.

E. Copy the seleted file to a specified disk

(1) Move the cursor to the file to be copied. Press **[ENTER]** to select the file. The instrument support the function of selecting multiple files. If the selecting operation is required to be canceled, move the cursor to the selected file and press **[ENTER]** to cancel the selection.

(2) When the selection is done, press the COPY softkey. If the current page shows an internal file list, the softkey would be COPY TO E:; If the current page shows an external file list, the softkey would be COPY TO I:. At this moment, the instrument will display a prompt information Are you sure to copy to NO.?.

(3) Press YES to copy selected files to the corresponding memory, or NO not to copy.

Basci operation for folder

In external file list (E:), operation for folder can be taken.

A :Enter the subdirectory by the following steps

(1) Move the cursor the desired folder;

(2) Press the SUB DIR softkey to enter the subdirectory;

NOTE:

a. If user wants to save the configuration information or copy the internal configuration information file to E:, it is suggested that above operations are taken in the E:\STA directory.

b. If user wants to save measurement results to E:, it is suggested that this operation is taken in the E:\CSV directory.

c.

B: Return to the parent directory by the following step

Press the PARENT DIR softkeyto return to the parent directory of the current file or folder.

Save measurement results

(1) In the <LCR Files List> page, enter the external E:\CSV directory and then return to the measure page. (This operation ensures that measurement results will be saved in the CSV directory.)

(2) In the measure page, move the cursor to FILE and press SAVE LOG to start saving measurement results to a U disk. Press SAVE STOP to stop saving.

Screen copy to U disk

(1) In the <LCR Files List> page, enter the external E:\BMP directory and return to the measure page to be saved.

(2) In the measure page, move the cursor to FILE and press SCREEN COPY to start saving measurement results to a U disk.

Chapter 6 Measurement Procedures and Examples

6.1 Safety Precautions

When the HV indicator is on, the voltage measured across the DUT is more than 10V, and in the case of a large capacitor the indicator may stay on for a while after the High Voltage has been switched off.

WARNING:

1. Do not –under any circumstances- touch the DUT when the HV indicator is on.

2.Please note that capacitors in the power supply of the instrument may be charged even when the power has been switched off.

3.This instrument is designed for high precision measurements and will only live up to our specifications when installed and used properly and in accordance with the manufacturer's instructions.

6.2 Installation

Check that the mains voltage selector has been set to the actual supply voltage.

Make sure that there is a ground connection in the mains outlet.

Connnect the megohmmeter to a two-terminal test fixture by means of two coaxial cables, as shown in the following figure.

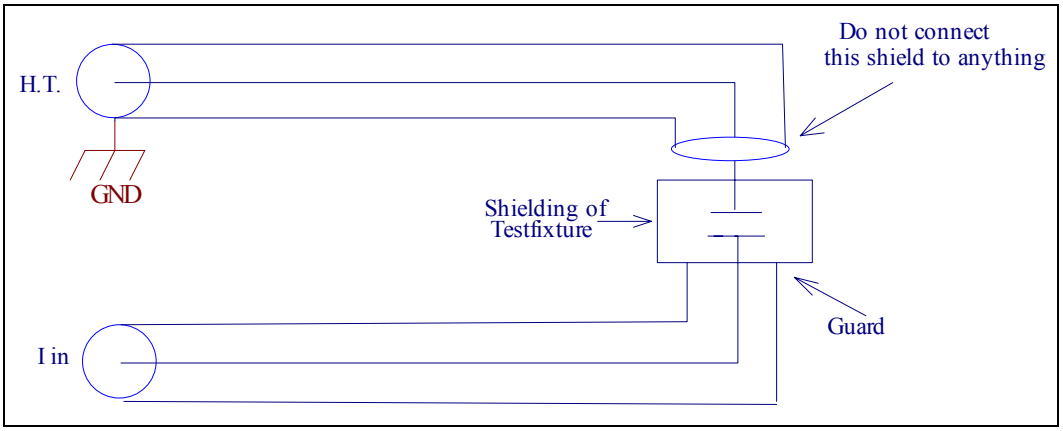

TH2684A supply up to 1000V (10 mA) on DUT.
TH2684 supply up to 500V (200 mA) on DUT.

6.3 Example for automatic testing

Wiring diagram for single-circuit power supply:

Figure 6.3.1

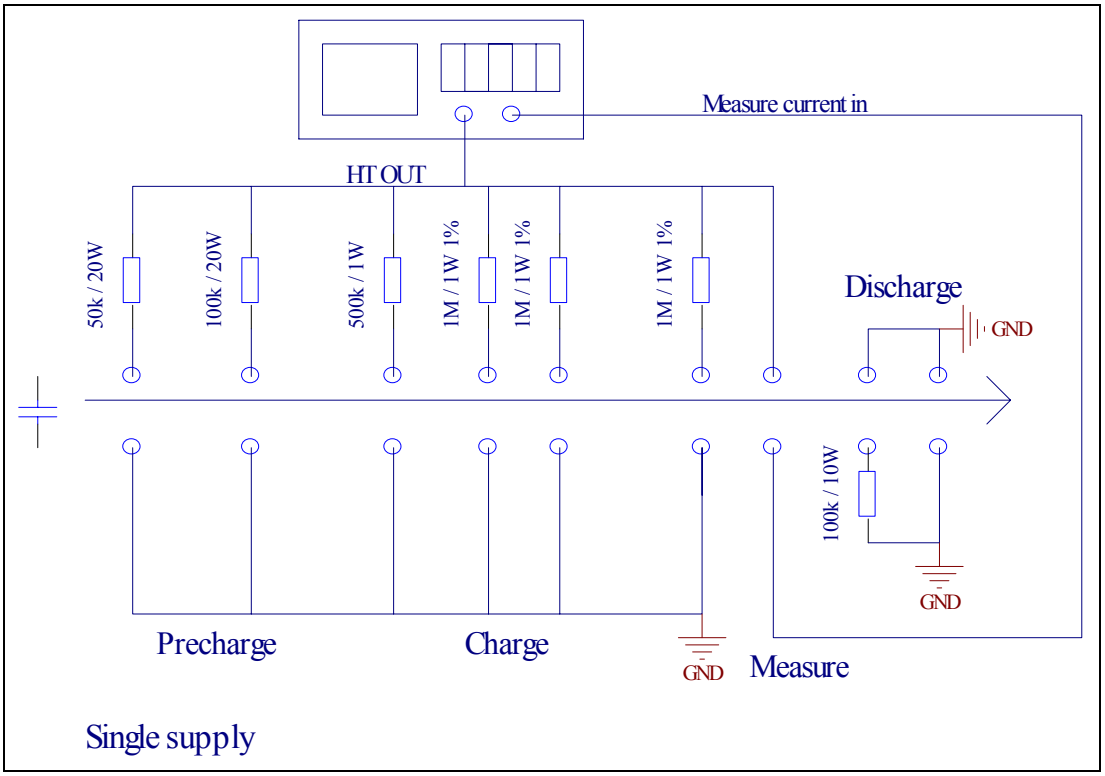

Wiring diagram for double-circuit power supply:

Figure 6.3.2

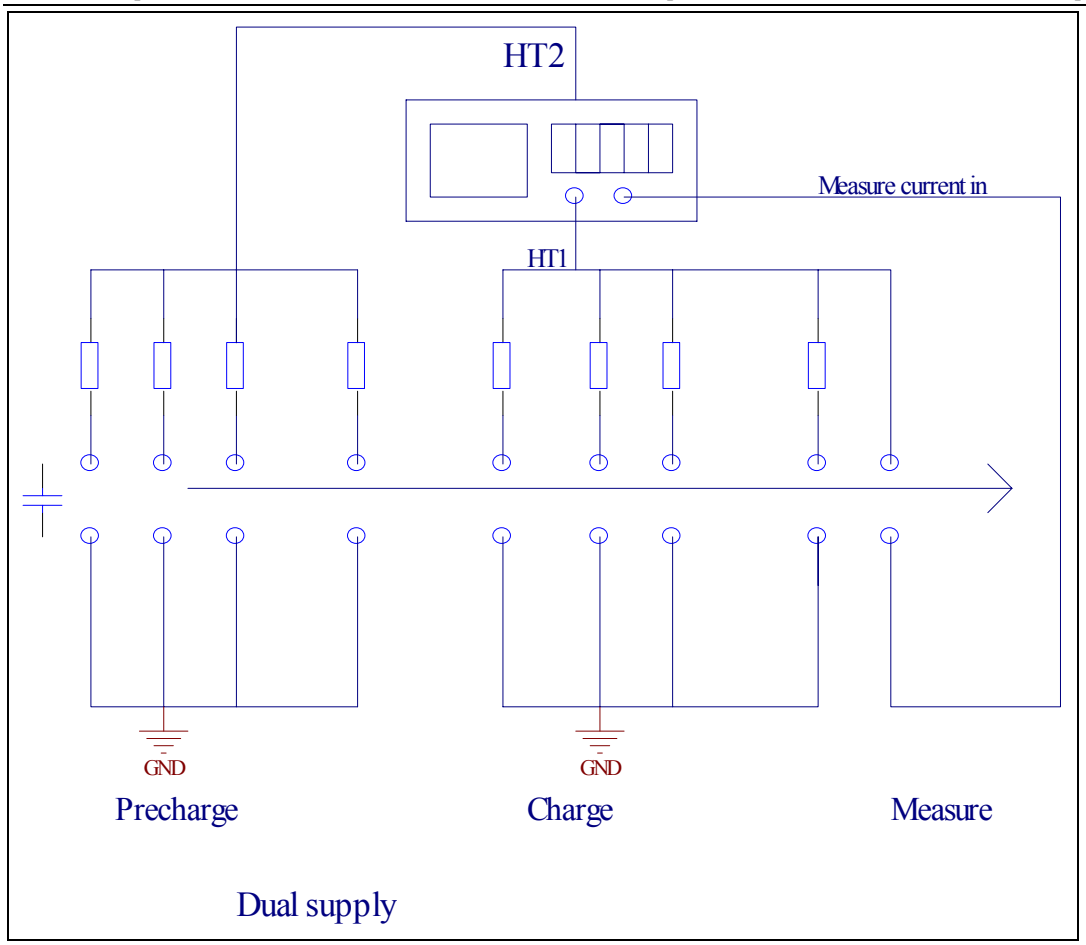

6.4 Insulation Testing of Capacitors

There are some limiting factors to be considered when measuring the Insultion Resistance of High Quality Capacitors.
There is a maximum value of obtainable insulation Resistance depending on the capacitance value and the applied test voltage. See figure 6.4.1 and 6.4.2 on the following pages. This is caused by the residual regulation noise in the 0.1Hz to 10Hz range from the H.V. power supply, which is impossible to either reduce or filter out in the Current Input stage without prolonging the stabilization time of the H.V. or the settling time for the Current Input Amplifier.
Most Capacitors show a memory effect by Insulation Resistance measurements. The resistance value will grow when they are charged repeatedly to the same voltage with the same polarity, and if the polarity is changed the resistance value will be lower than normal. i.e. if a 60sec Insulation Resistance measurement according to the international standards has to be repeated, the capacitor under test must be carefully discharged and the second measurement must be delayed about 24 hours in order to obtain comparable measurements.
Some Capacitors with very high Insulation Resistance f.ex. Polystyrene and Polypropylene Film Capacitors will, when exposed to an absolute DC voltage, for a long period of time, i.e. more than 200sec. start to generate a current noise due to internal charging phenomena. This appears on the display as if the resistance value starts decreasing and the readout becomes noisy.

Figure 6.4.1 Normal Circumstances

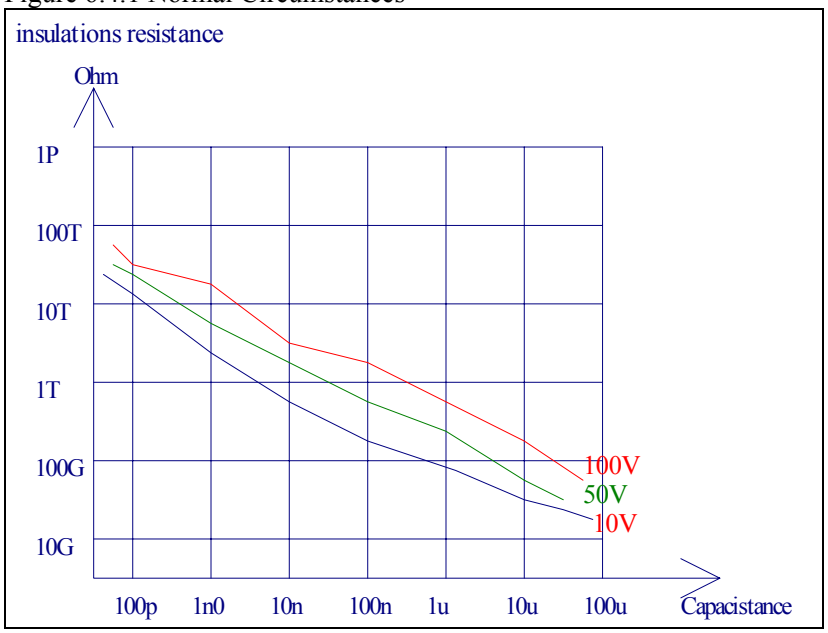

Figure 6.4.2 Interfered Circumstances

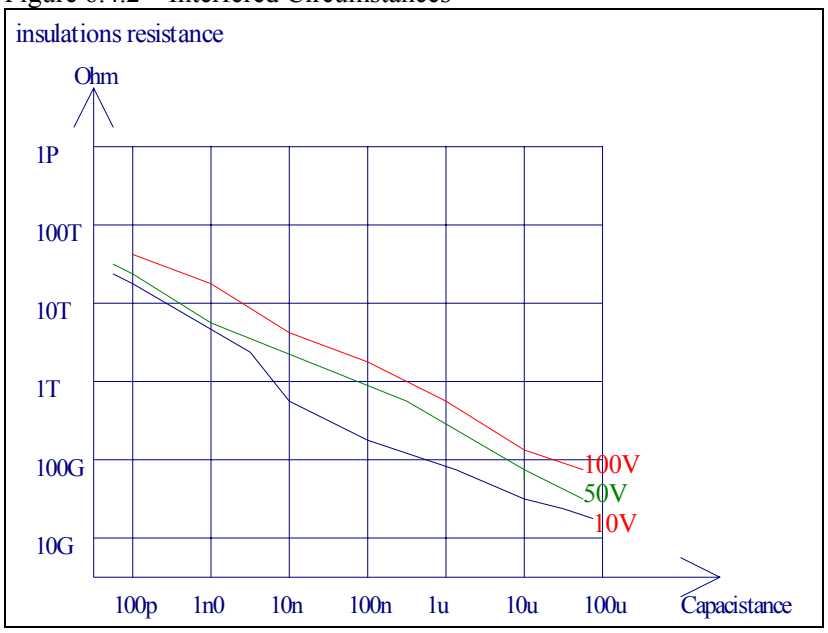

6.5 Charge Resistors for Automated IR Testing

Scope

Automated testing of capacitor insulation resistance (IR) with TH2684/TH2684A IR tester often requires a stepwise charging of the capacitor before the acutual resistance measurement. This could be due to the fact that the charging time is longer than the time between measurements or to secondary effects like post charging ("dielectric absorption") of foil capacitors. The latter makes it necessary to ensure that the capacitor is fully charged before measurement. This application note describes the fundamental of calculating the charge resistor values.

General

Fig. 6.5.1 shows the set-up for TH2684 with two HV supplys, one for precharging and one for fine charging and measurement.

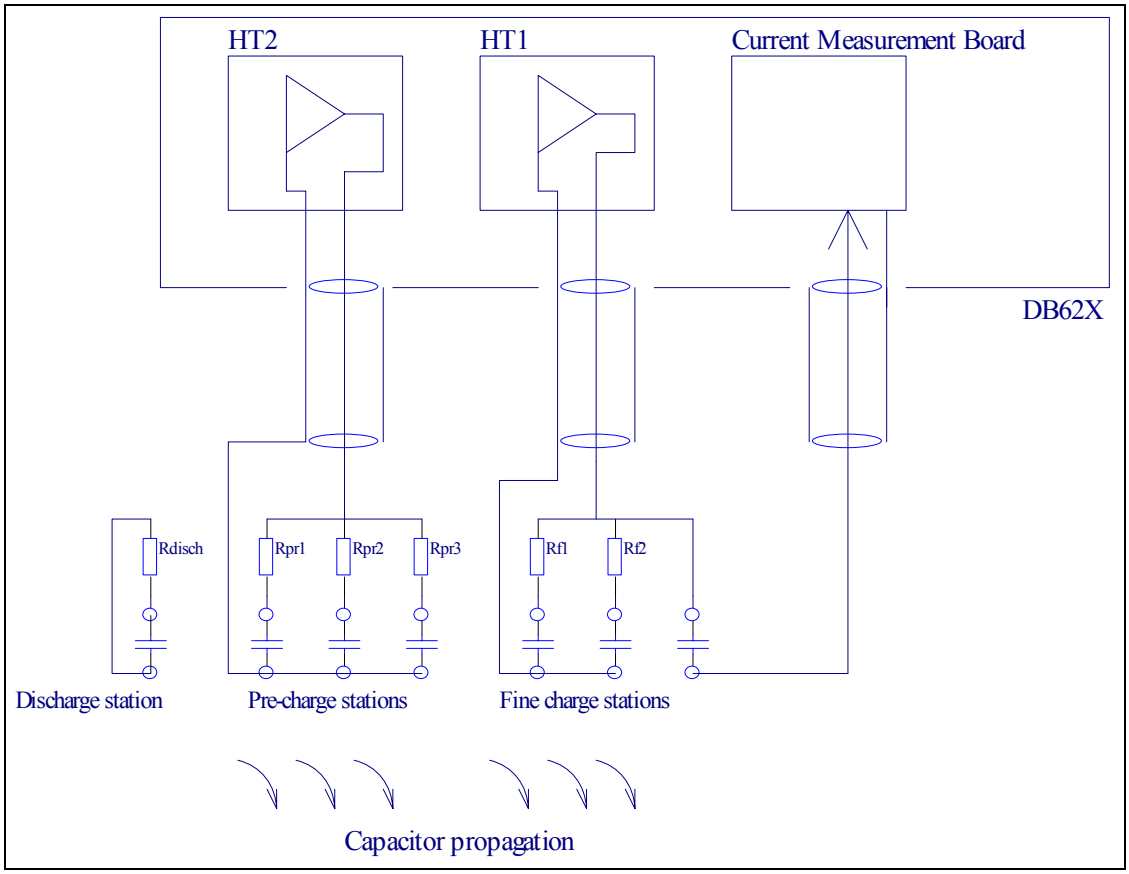

Fig. 6.5.1 Example of IR testing set-up

Normally, there is more than 3 precharge and more than 10 fine charge stations, but for simplicity the number is reduced. In the example there is three precharge stations and two fine charge stations before the measure station. The precharge stations perform the bulk charging of the capacitors. The purpose of the fine charge stations is to ensure that the capacitor is charged to the exact test voltage.

The capacitors propagate stepwise from one charge station to the next. The resistors must be placed near to the charge station. When a capacitor is connected to the first precharge station it is charged by both HV2 and the other capacitors connected to HV2.
If the IR measurement has been precharged with a high voltage isolation test ("flash test"), a discharge station should always be used before the precharge stations. If the capacitor is not discharged before entering the precharge stations it could lead to destruction of the HV2 due to over voltage or to IR measurement error.

Rpr1 is limiting the charge current to protect the capacitor and the surrounding equipment. The value is calculated from:
Rpr1 = UHV / Ic,max (1)
Always use a series resistor at the first charge station.
The maximum allowable current is usually much larger than the current limit of the HV supplies. However, due to the charge stored in the HV output filter, calbles etc. a very large current could flow into the capacitor creating electronic transients destructive to both capacitor and electronic equipment.

Testing foil capacitors

For charging foil capacitors with post chage properties it is assumed that the capacitor is charged to the full test voltage already at the first station. The first resistor is given by (1), the last resistor (Rpr3 in figure 6.5.1) should match the following fine charge resistors (see later). The intermediate (Rpr2 in figure 6.5.1) resistors should have values between 10-20 times Rpr1 and Rpr3 .
The fine charge reistors should match the input resistance Ri of the current input amplifier. In TH2684/TH2684A IR tester, this resistor can be switched to either 10kΩ or 1MΩ. In figure 6.5.1 only two fine charge stations are shown, in many cases more than 10 stations are preferred.
Example (figure 6.5.1):

C = 2.2uF Ic,max = 1A UHT= 500V Ri = 1Mohm

Rpr1 = 500V / 1A= 500 ohm
Rpr2 = 10 Rpr1 = 5kohm
Rpr3 = Ri = 1Mohm

Rf1 = Rf2 = Ri = 1Mohm

Timing Considerations

To ensure adequate charging of the capacitors the charge times should be caculated. At the first precharge station the series resistor value is normally low, and charge time is basically limited by the HV supply current limit:

$$T_{Ch} = C * U_{HT} / I_{Limit}$$

Example (Figure 6.5.1):
C = 2.2uF Ic,max = 1A UHT= 500V ILimit = 200mA

TCh = 2.2uF * 500V/200mA = 5.5ms

If the HV current limit is higher than the maximum allowable charge current for the capacitor, the

charging is exponential with a time constant of : $\tau = R_{pr1} * C$

The capacitor should be connected to the first station for a period of at least 3 *τ bringing the capacitor voltage up to 95% of U_{ht2} .
Example (Figure 6.5.1):

C = 2.2uF Ic,max = 100mA UHT = 500V ILimit = 200Ma

Rpr1 = 500V / 100mA = 5 kohm
3 *τ = 3 * 5kohm * 2.2uF = 3 * 33ms = 33ms

Range selection

TH2684/TH2684A provides 7 ranges:
Range 1 :10OuA – 1mA;
Range 2 :10uA – 100uA;
Range 3 :1uA – 10uA;
Range 4 :100nA – 1uA ;
Range 5 :10nA – 100nA;
Range 6 :1nA – 10nA ;
Range 7 :10pA – 1nA ;

The correct range is established from measuring the leakage current on several known good and known bad components at the specifried voltage and charge/dwell/soak time. The range to choose is the most sensitive range that do not lead to overflow at the upper limit of the leakage current. The upper limit is established from the measure voltage divided with the minimum insulation resistance: $L_{Limit} = U_{HT} / IR_{min}$.

Example: U_{HT} = 100V, IR_{min}= 25Gohm => $I_{leak,max}$ = 4 nA, select range 6.

Wiring and installation in sorting machine

When installing the TH2684/TH2684A IR tester and charge reistors in sorting machines, great care should be taken in the wiring. The general rule is to avoid electrical loops that can pick up magnetic noise fields (hum) and add self-indcutance.Also the effects of flash-overs (sparks) either within the DUT or resulting from mechanical problems like bent component leads have to be considered.
If a flash-over occurs the wires to that staion act as antennas for the electrical transient. This could lead to disturbances or failures in all electronic equipment in the sorting machine.
The problem is aggravated by loops in the wiring from two reasons:
1.The loop acts as an antenna for a magnetic transient influencing the system.
2.Together with stray capacitance in the wiring the self-inductance from the loop forms an oscillating circuit that could amplify the voltage transient.

The best way to protect against flash-overs is to place the charge resistors as close as possible to the charge stations. In this way the transient resulting from the flash-over is damped near the source. However, due to the need for easy replacement of sets of charge reistors many sorting machines have all the charge resistors placed in a box or on a printed circuit board. Figure 6.5.2 shows the schematic of such a system.

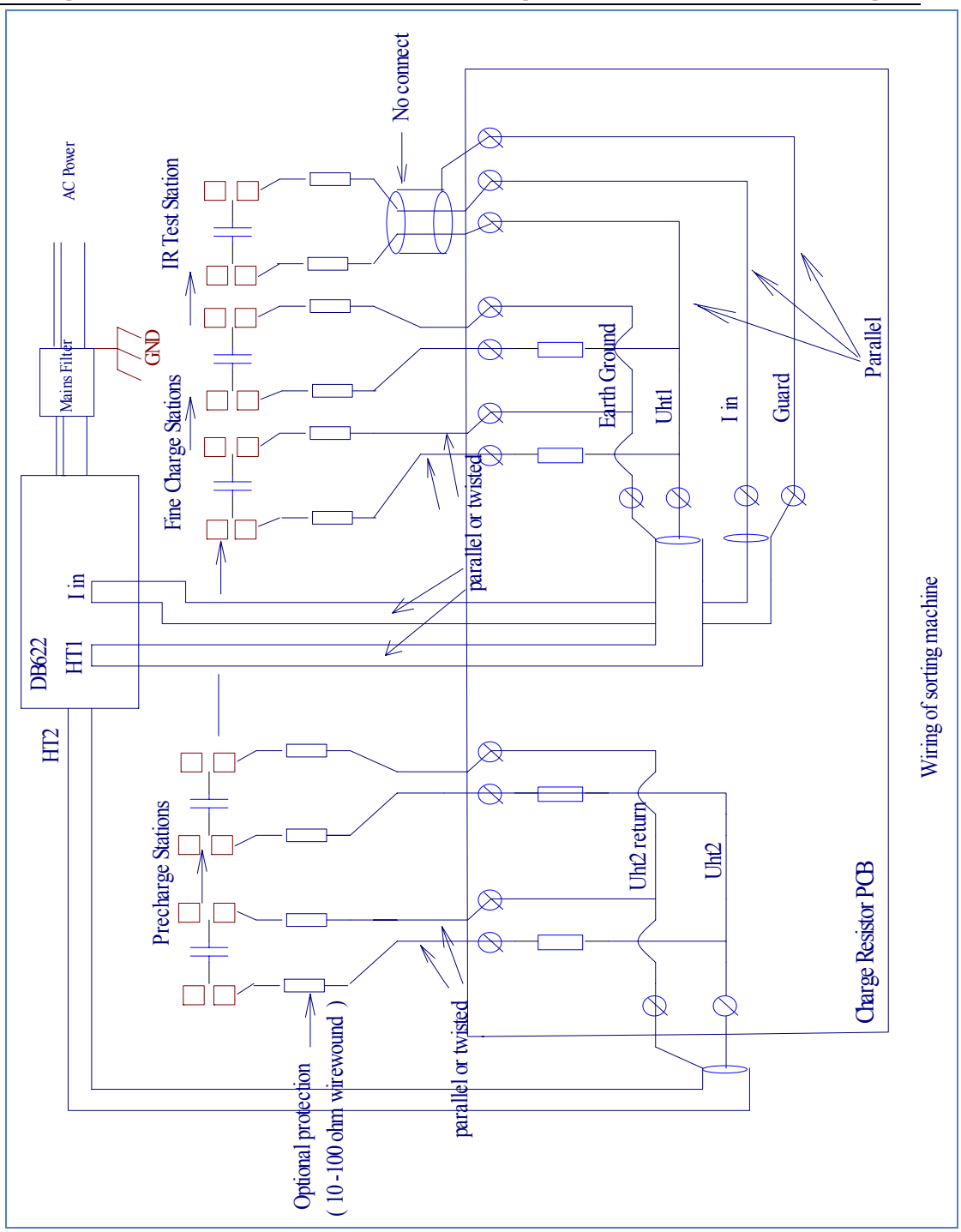

Figure 6.5.2 Wiring of sorting machine

The precharge stations are supplied from HV2. The return path of the charge current must be the HV2 return and each precharge station must have its own return wire. In this way it is possible to ensure parallel wiring of the complete path from tester to each precharge station.

The fine charge stations and the IR test station should be considered as a hole. As for the precharge

stations, the fine charge stations must have individual return paths and they must have a return path to the HV1 (H.V.). Furthermore, the wiring of the I in connection must be parallel to the wiring of the HV1. This ensures both minimum hum susceptibility and maximum protection against flash-overs. In order to shield the I in connection from capacitively coupled noise the Guard connection should be used all the way to the IR test station. The end of the shield must never be connected to anything but the shield of the I in connector.

Even though there is a demand of easy replacement of charge resistors, it is recommendable to place protection resistors near the charge stations. These reistors should be wirewound types of 2-3W and values of 10-100Ω.

In sorting machines the chassis is well grounded and the individual parts are well interconnected. This means that the wiring to the test equipement has considerable stray capacitance to earth ground. It is therefore recommendable to have individual mains filters on all test equipment within the sorting machine. The mains filters must be well connected to the chassis near the test equipment. This also minimizes influence between measuring equipment, computers motor controls, etc.

6.6 Insulation resistance measurement

Scope

When measuring Insulation Resistance (IR) with TH2684/TH2684A, there are several issues to consider when comparing to resistance measurement with a common multimeter. This application note is intended to address some of these.

General

In its simplest form an IR test is performed by applying a DC voltage over the isolation barrier and measure the corresponding DC current, often referred to as “leakage current” (which should not be confused with the leakage current measured applying an AC test voltage). The IR is then calculated from: $IR = UHT / I_{Leak}$ (1)

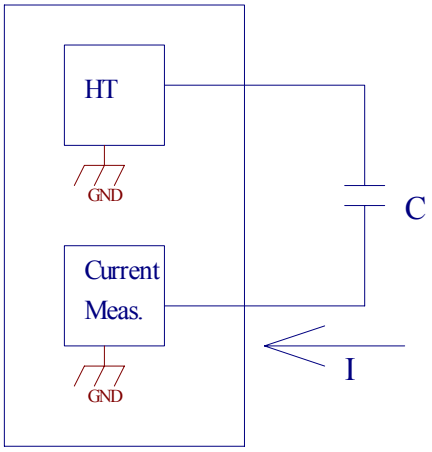

Figure 6.6.1 Standard IR Measurement

Figure 6.6.1 shows the basic setup for IR testing.

This setup is used when both electrodes of the test object (here a capacitor) are electrically floating.

Connecting TH2684/TH2684A series Insulation Resistance Tester

When connecting the TH2684/TH2684A to the DUT, there are few issues to address to ensure safety, noise free measurement, and minimum disturbance of the surroundings and long term stability of the instrument. The general rule is to avoid electrical loops that can pick up magnetic noise fields (hum) and add self-inductance. Also the effects of flashovers (sparks) either within the DUT or resulting from mechanical handling problems have to be considered.
If a flshover occurs, the wires to the DUT act as antennas for the electrical transient. This could lead to disturbances or failures fin the tester or in electronic equipmen in the vicinity of it.
The problem is aggravated by loops in the wiring from two reasons:

1. The loop acts as an antenna for a magnetic transient influencing the surroundings.
2. Together with stray capacitance in the wiring the self-inductance from the loop forms an oscillating circuit that could amplify the voltage transient.

The stray capacitance of the shielded cables should not be ignored either. The 1m cables delivered with the instruments have a capcity of approximately 100pF and should not under normal circumstances cause any problems. However, if the test voltage is turned on before contact is made with the DUT, the charge stored on the cable will discharge directly into the DUT. This discharge happens at a potentially very high current and will not be limited from the current limit of the tester. The longer the cables, the more energy is stored in it and the worse is the potential damage caused by it. Even if the cables are connected to the DUT before the test voltage is turned on, a bad or unstable connection can lead to high-current flashes during the (attempted) charging of DUT. The best way to protect against flashovers is to place wire wound resistors as close as possible to the DUT. In this way the transients resulting from the flashovers are damped near the source. The resistors have values of 10-1000Ω and a power rating of 2-3W.

In summary the following rules apply:

- Use short cables.
- Avoid or minimize loops in the single path.
- Ensure a good electrical and mechanical connection between calbes/probes.
- Never turn on the test voltage before good connection to the DUT is ensured.
- If one of the rules above has to be broken, use protective resistors in the wiring near the DUT

In the following some typical measure set-ups are described.

IR measurement using a test jig

A convenient way to measure leaded electronic components is to use a jig with suitable clamps. The jig shield (if any) must be connected to the shield of the I in cable. The shield of the I in cable is connected to “Guard” which is the internal measure ground. If the jig is shielded it must be isolated from the surroundings.

- Never connect the guard to earth ground.
- If the cables are longer than 1 m it is recommended to use protective resistors.

IR measurement using tweezers or probes

When measuring small electronic devices like SMD capacitors connection is often made with probes or hand tweezers. The tweezers are isolated to protect the operator. When connction is made to the DUT, the test voltage is applied (i.e. triggered by means of a foot pedal). The cable shields

must be ended without connection and well isolated form the surroundings.

- Never connect the guard to earth ground
- Due to the delicacy of handling the devices, it is strongly recommended to use protective resistors near the tweezer electrodes.

Charging and discharging large capacities

In most cases when measuring IR, the DUT exhibit an electrical capacitance. This capacitance has to be fully charged before the IR is measured. Figure 6.6.4 shows the voltage and the charge current when charging a capacitor of 6.8 μF to 100V with a HV current limit of 80mA and a total series resistance of 212Ω (12Ω in output reistance and 2 100Ω protective resistors).

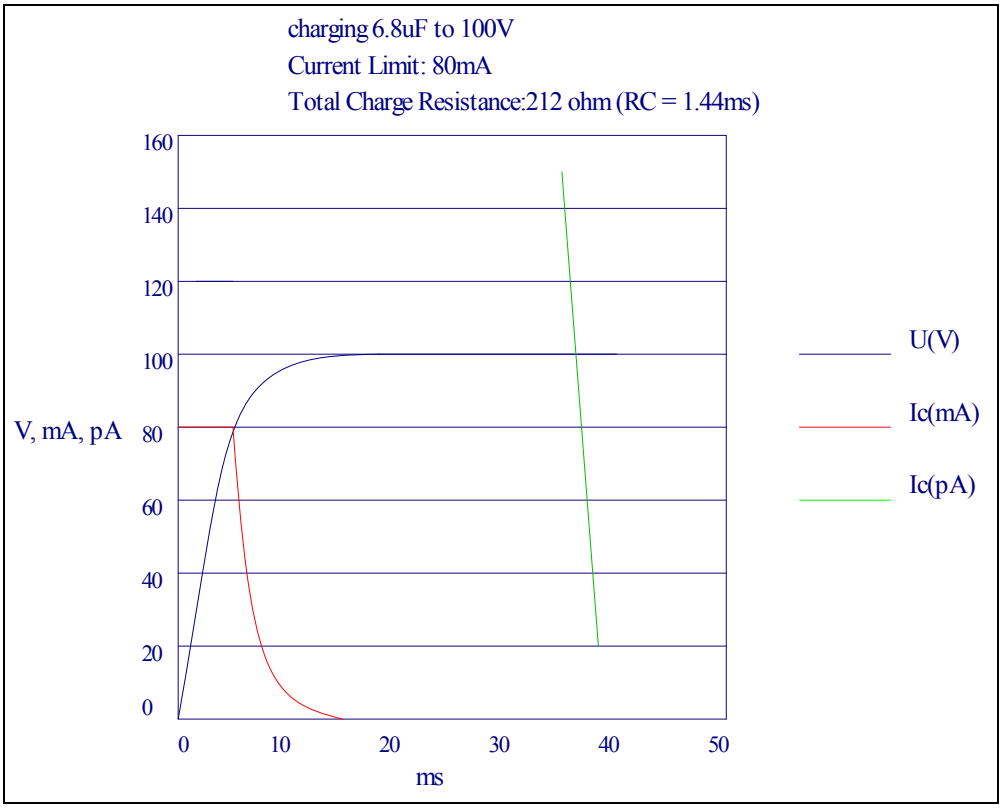

Figure 6.6.4 Charge sequence

In the first 7ms the voltage increase is linear due to the current limit. The linear charge time can be estimated from:

$$T_{Ch} = C * U_{HT} / I_{Limit} \qquad (2)$$

After the linear charge the current is limited by the series resistance and follows an exponential curve. In figure 6.6.4 the current is also shown in pA scale (green). However, for most isolators the charge time is not given by charing the capacity but from the effect of “dielectric absorption” (often referred to as “soaking”). In foil capacitors this effect has a time constant of 3 to 10 seconds. This is why it is often required to apply the voltage for say 60 seconds before the measurement is made. The time from the capacity is charged until the measurement is made is often called dwell time. In some cases the dwell time is longer in order to ensure that no ionizion in air or another isolator builds up resulting in arcing and flashover.

After the measurement the capacity has to be discharged. In TH2684/2684A, this is done by switching the output to a 2kΩ/5W wire wound resistor. The stored energy in a capacitor is calculated from:

$$E_C = \frac{1}{2} * C * U^2 \qquad (3)$$

At 500V this limits the capacity that can be discharged by the internal resistor to 4mF. The discharge time can be found from:

$T_{disch} = R_{disch}.C.\ln(U_{start} / U_{finish})$ (4)

Example: R_{disch} = 2kohm, C = 4mF, U_{start} = 500V, U_{finish} = 5V :
t disch = 36 sec!

If larger energies than specified here have to be discharged or if the discharge time must be shortened, it must be done with an external resistor.

Range selection of TH2684/ TH2684A:

Range 1: 10OuA – 1mA;
Range 2: 10uA – 100uA;
Range 3: 1uA – 10uA;
Range 4: 100nA – 1uA ;
Range 5: 10nA – 100nA;
Range 6: 1nA – 10nA ;
Range 7: 10pA – 1nA ;

The correct range is established from measuring the leakage current on several known good and known bad components at the specified voltage and charge/dwell/soak time. The range to choose is the most sensitive range that do not lead to overflow at the upper limit of the leakage current. The upper limit is established from the measure voltage divided with the minimum insultaion resistance:

$$L_{Limit} = U_{HT} / IR_{min}$$

For example: U_{HT} = 100V, IR_{min}= 25Gohm => $I_{leak,max}$ = 4 nA, select range 6.

6.7 Examples for sequence test

Example 1: 20 sec. Measure to Go

STEP	FUNCTION	HV(V)	RANG	AVG	LOW	HIGH	TIME
1	CHARGE	500	N/A	N/A	N/A	N/A	1.0s
2	WAIT	500	N/A	N/A	N/A	N/A	1.0s
3	MEAS. TO GO		AU _H	4	500Gohm		18.0s
4	DISHCHAGE						2.0s
5							

The tester is in resistance mode.

The DUT is charged to 500V for 1 sec. second., then there is a wait state of 1 sec. before measurement starts. If the measured resistance exceeds 500GΩ within18 sec., PASS is set, the sequence is stopped and the DUT is discharged for 2 sec.. If the resistance do not exceed 500GΩ, the actual value is measured after a total of 20 sec., FAIL is set and the DUT is discharged.

Example 2: Flash test followed by IR test

STEP	FUNCTION	HV(V)	RANG	AVG	LOW	HIGH	TIME
1	CHARGE	400	N/A	N/A	N/A		1.0s
2	WAIT	400	N/A	N/A	N/A		1.0s
3	FLASH		3	1	1uA		2.0s
4	DISCHARGE						AUTO
5	CHARGE	100	N/A	N/A	N/A		1.0s
6	WAIT	100	N/A	N/A	N/A		1.0s
7	MEAS. TO GO		1H	4	500G		18.0s
8	DISCHARGE						AUTO

1uA is a current limit of the flash test. It should be larger than the absorption current in order not to detect a flash over immediately after the wait state. If a flash over occurs, the sequence is stopped and FAIL is set. If the DUT passes the flash test, PASS is set. Then an insulation resistance test is performed at the rated voltage. 500Ω is resistance limit. If the IR is too low, FAIL is set, otherwise PASS is set.

Chapter 7 Test Performance

7.1 I.R./L.C. TEST

7.1.1 Measurement parameters

IR test: I.R.（Isolated Resistance）, L.C.（Leakage Current）

7.1.2 General specifications

General specifications

Model	TH2684	TH2684A
Operating temperature and humidity	10℃ - 40℃, ≤ 90% RH	
Power supply	90 – 130 V AC(60Hz) or 198 -260V AC(50HZ)	
Power consumption	250W	150W
Dimensions (W×H×D)	43cm * 40cm * 13cm	
Weight	14kg	10kg

7.1.3 Specifications

Resistance test	**TH2684**	**TH2684A**
Range	10 kΩ– 50TΩ	10 kΩ– 100TΩ
Accuracy	I > 100pA: 2% I ≤ 100 pA: 2% ± Vtest/2pA	
Current test		
Range	Range 1: 10OuA – 1mA, Internal input impedance 10 kΩ Range 2: 10uA – 100uA, Internal input impedance 10 kΩ Range 3: 1uA – 10uA, Internal input impedance 10 kΩ Range 4: 100nA – 1uA, Internal input impedance 10 kΩ Range 5: 10nA – 100nA, Internal input impedance 10 kΩ Range 6: 1nA – 10nA, Internal input impedance 1MΩ Range 7: 10pA – 1nA, Internal input impedance 1MΩ	
Accuracy	2% ± 2pA	
Measurement voltage		
Range	10 to500V, 1V resolution	10 to 1000V, 1V resolution
Accuracy	2%, or ± 1V	
Source resistace	200Ω	
Current limit	2mA, 25mA, or 200mA	2mA, 25mA, or 100mA
Power switch	Manually tun on or off on front panel, or controlled by built-in timer, or by remote control.	
Charge time	0s to 1000s, programmable	
Delay	0s to 1000s, programmable	
Discharge resistance	2kΩ	
Discharge time	t = 0.03 x Cx (in μF), when V_{test} falls to 1% of the test level.	
Measurement speed		
Single trigger mode	Fast: single measurement:<50ms (exclude charge time) Average up to 100 measurements: approx.50+(N-1) x 22 ms (exclude charge time) Medium: single measurement:<110ms (exclude charge time) Average up to 100 measurements: approx..110 + (N-1) x 44 ms (exclude charge time) Slow: single measurement: <130ms (exclude charge time) Average up to 100 measurements: approx. 130 + (N-1) x 90 ms (exclude charge time)	
Continuous trigger mode	Fast: single measurement <50ms, Average up to 100 measurements: approx. 50 + (N-1) x 22 ms Medium: single measurement <110ms, Average up to 100 measurements: approx. 110 + (N-1) x 44 ms Slow: single measurement <130ms, Average up to 100 measurements: approx. 130 + (N-1) x 90 ms	

	TH2684	TH2684A
Comparator	4 bins: (3 bins for PASS, 1 bin for FAIL)	
Range mode	Auto, Hold	
Average times	1 to 100	
Memory	20 sets of setup values can be stored.	
Standard interface	GPIB (optional), RS232C, HANDLERinterface, USBDEVICE(USBTMC and USBCDC support), USBHOST(FAT16 and FAT32), SCANNING	

7.2 Safety summary

7.2.1 Insulation resistance (IR)

Referring to the working condition, the insulation resistance of the power terminal and the case should not be less than 50MΩ.
Under the damp and heat condition, the insulation resistance should not be less than 2 MΩ.

7.2.2 Insulation intension

Referring the working condition, the power terminal and the case should load the AC voltage with 50Hz in frequency and 1.5kV in rated voltage for 1 minute, and should have no breakdown and arcing.

7.2.3 Leakage current

The leakage current should not be more than 3.5mA (The AC effective value).

7.2.4 The EMC requirement

- The ransient sensitivity of the instrument power meets the GB6833.4.
- The conduction sensitivity of the instrument meets the GB6833.6.
- The radiated interference of the instrument meets the GB6833.10.

Chapter 8 Remote Control

Besides the front panel control, TH2684/HT2684A supports RS232C serial interface (standard) and GPIB parallel interface (optional) for remote control. User can use only one interface at a time. Standard Commands for Programmable Instrument (SCPI) is fully supported by the RS-232 and GPIB interfaces, however they use different hardware configurations and communcitoan protocols. The operation method is dealt with in this chapter, the use for interface commands, in chapter 9

8.1 RS232C interface operation

The instrument provides abundant commands for remote control, thus through the RS232C interface a computer can achieve all operations on the front panel.

8.1.1 RS232C connection

RS-232 standard, also called as asynchronous serial communication standard, has already been widely used for data communication between computers, computer and external equipment. RS is the English abbreviation of Recommended Standard; 232, the standard number. This standard is issued by EIA in 1969, which rules to send one bit in a data line every time.
Configurations of most serial interfaces are not strictly based on RS-232 standard. A 25 pin connector is used on each terminal (IMBAT uses a 9 pin connector). The most frequenctly used RS-232 signals are as follows:

Table 7-1 RS-232 signals

Signal	Code	Pin number of 25-pin connector	Pin number of 9-pin connector
Request to send	RTS	4	7
Clear to send	CTS	5	8
Data set ready	DSR	6	6
Data carrier detect	DCD	8	1
Data terminal ready	DTR	20	4
Transimitted data	TXD	2	3
Received data	RXD	3	2
Signal ground common	GND	7	5

As most serial interfaces worldwide, the serial interface of TH2684/TH2684A is also not strictly based on RS-232 standard but only uses the smallest subset of this standard. The signals are listed in the following table.

Table 7-2 RS-232 signal and pin number

Signal	Code	Connetor pin number
Transmitted data	TXD	3
Received data	RXD	2
Signal ground common	GND	5

The reason is that the use of three lines is much more inexpensive and much simpler than that of five lines or six lines, which is the biggest advantage of using serial interface for communication.

Note: The definition for serial interface pin used by the instrument is different from that of standard 9 pin connector.

RS232C used on this instrument applies 9-pin DB socket, and the sequence of pin is as follows:

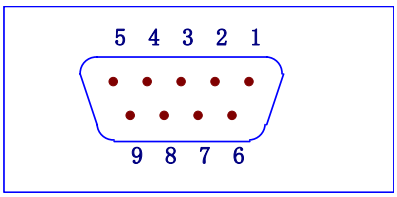

（side view）

Figure 7-1-1 Serial interface connector

Use standard 9-pin DB plug to connect the connector.

⚠ **Warning:** Before connecting or disconnecting the connector, please power off the instrument to avoid electrical shock hazard.

⚠ **Warning:** Do not short the output terminal or case so as to avoid damage to the DUT.

8.1.2 Communicating with PC

■ The connection of the instrument with PC is shown in figure 7-1-2:

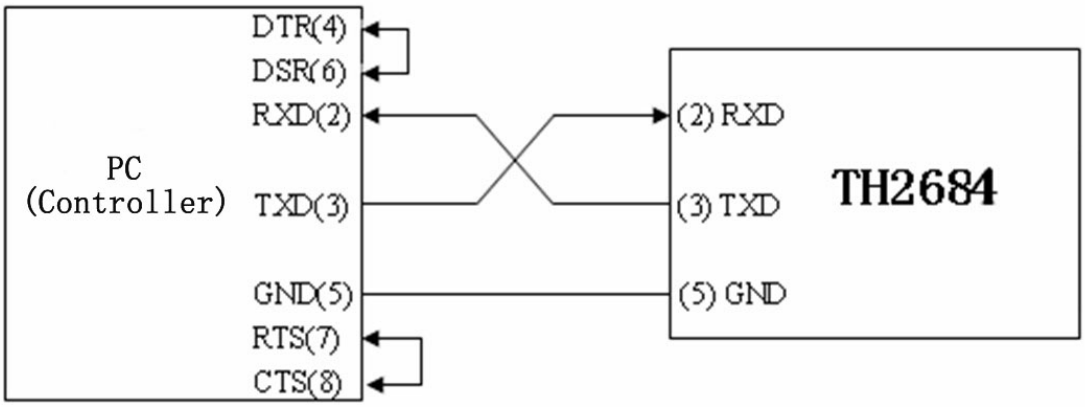

Figure 7-1-2 Connection of the instrument with PC

Figure 7-1-2 shows that the serial interface pin definition of this instrument is different from that of 9 pin connector used in IMB AT compatible computer. User can make three-wire connection cable by using double-core shielding lines or purchase the serial interface cable from our company.
When making connection cable, please short the 4th pin and the 6th pin, the 7th pin and the 8th pin.

- Connect the instrument with PC through serial interface. Set the bus mode firstly as RS232.
- Serial interface specifications

Table 7-3 Serial interface specifications

Transmitting mode	Full Duplex Asynchronous Communication containing start bit and stop bit
Baud rate	Preset as 9600 bps
Data bits	8 BIT
Stop bits	1 BIT
Parity bits	None
Terminal character	NL（Line break, ASCII code 10）
Handshake mode	Software handshake
Connector	DB 9 pin

Command syntax and format will be described in chapter 6 “Command Reference”.

8.2 GPIB interface operation

8.2.1 GPIB bus

IEEE488 (GPIB) is an international bus interface standard used on interlligent instruments. IEEE is the English abbreviation of Institute of Electrical and Electronics Engineers, and 488 is the standard number. Through this interface, TH2684/TH2684A can communicate with PC or others intelligent equipments and meanwhile can make up automatic test system with the other test equipments. Two or more equipments can be connected on a same bus. TH2684/TH2684A applies IEEE488.2 and the interface plate can be optionally purchased by user. Control command system is open so that user can use the PC operation interface provided by TH2684/TH2684A or take measurements by the control command system. The control command system supports most functions of the instrument, that is to say, user can execute almost all operations on PC. Thus remote control to the instrument is realized.

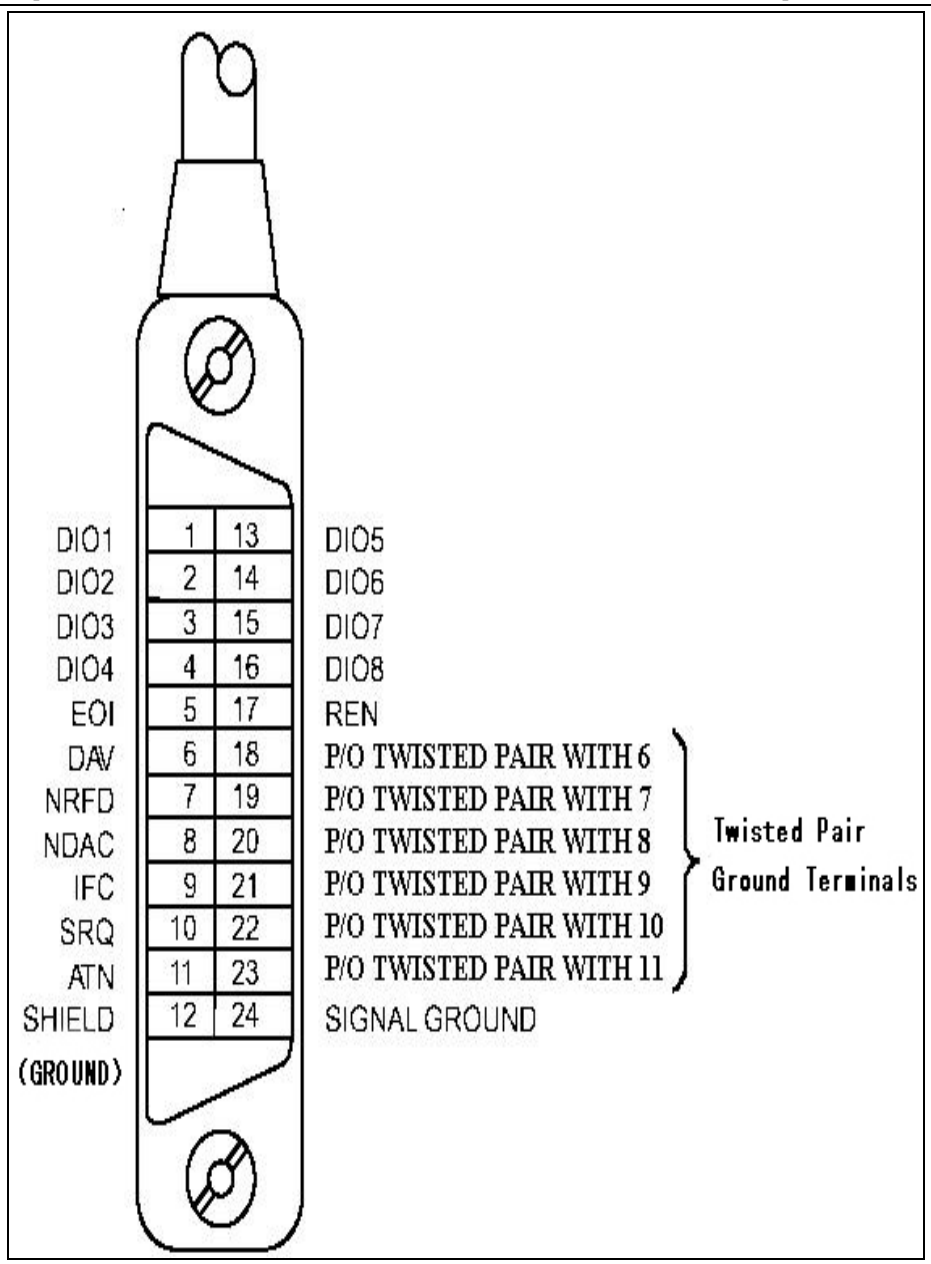

Figure 7-2-1 GPIB connector/ Pin structure

When configuring a GPIB system, the following restrictions must be adhered to.

1. The total length of cable in one bus system must be less than or equal to two meters times the number of devices connected on the bus (the GPIB controller counts as one device) and the total length of cable must not exceed 20 meters.
2. A maximum of 15 devices can be connected on one bus system.
3. There are no restrictions on how the cables are connected together. However, it is recommended that no more than four piggyback connectors be stacked together on any one device.

GPIB System interconnection-1:

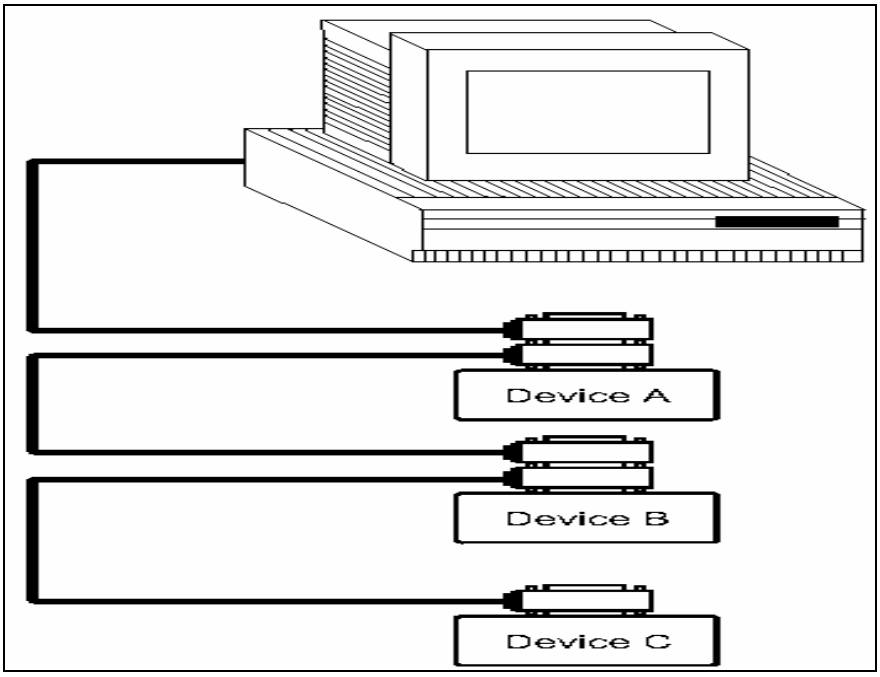

Figure 7-2-2 Typical GPIB system interconnection-1

GPIB System interconnection-1:

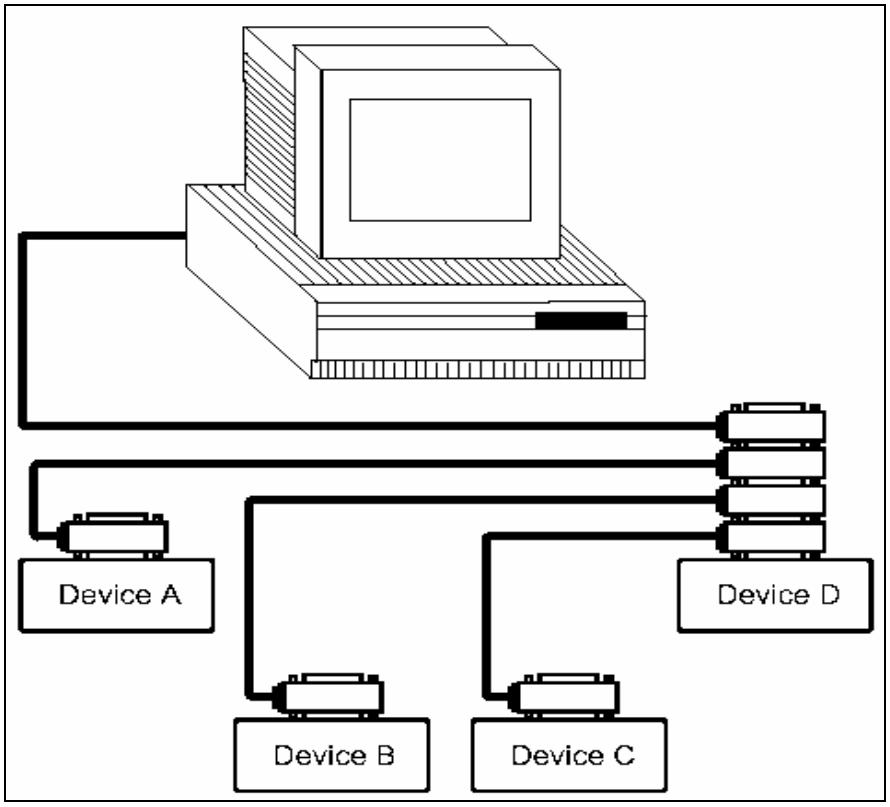

Figure 7-2-3 Typical GPIB system interconnection

8.2.2 GPIB interface capability

The following table provides the intrument's GPIB capabilities and functions.

Table 7-4 GPIB general functions

Code	Function
SH1	Complete Data Source Handshake capability
AH1	Complete Acceptor Handshake capability
T6	Basic Talker; Talk-Only; Unaddressed if MLA; no serial poll.
L4	Basic Listener; Unaddressed if MTA; no Listen Only.
RL1	Remote/Local capability
DC1	Device Clear capability
DT1	Device Trigger capability
C0	No controller capability
E1	Drivers are open-collector

8.2.3 GPIB addressing

The addressing mode provided by TH2882AS is single address. TH2684/TH2684A is shipped from the factory with a GPIB address of 8. User can set the address to a value of 0 to 30 and the address is saved in the non-volatile memory.

8.2.4 GPIB bus commands

TH2684/TH2684A series insulation resistance tester will respond to the following bus commands:

- ABORT I/O (IFC)
  Stop the bus working. Don't receive the instrument information, and reset the interface to the idle state.
- CLEAR LOCKOUT/SET LOCAL
  Control the instrument. The instrument can work at a remote place.
- DEVICE CLEAR (SDC or DCL)
  Clear the selected instruments or all the instruments.
- LOCAL (GTL)
  Return the local control.
- LOCAL LOCKOUT (LLO)
  Lock the local command. When the remote instrument receives this command, the local command will be locked.
- REMOTE
  Set the instrument to remote mode.
- SPOLL
  The SPOLL (serial poll) command is used to set the bus address status byte. 8 bytes are used to shield, read and judge the instrument operating status.
- SERVICE REQUEST
  When TH2684/TH2684A requires the controller to execute a task, it will send out a SRQ service request control signal. SRQ, deemed as an interruption, will inform the controller

to prepare the transimitted data or that errors exist on the instrument. As soon as TH2684/TH2684A sends a SRQ service request signal, it will set the status byte to 6. 6 bytes are RQS request service bytes and sometimes connects with serial poll to act as the status byte. When TH2684/TH2684A enables the SPOLL command, it will clear the RQS request service bit and the SRQ string. Each bit in a status byte will enables a SRQ service request. User can shield the status byte to judge which bit causes TH2684/TH2684A to set SRQ. For details, see "Status Byte".

- TRIGGER (GET)

  Trigger bus command. This command can be sent to a selected device or all listener devices. It is necessary to assign TH2684/TH2684A as a listener device firstly and then set the trigger mode as bus trigger mode. Finnally send trigger data.

8.2.5 SCPI（Standard Commands for Programmable Instruments）

SCPI is a new general command based on the IEEE488.2-1987 standard. (SCPI is the same as TMSL, a system language for measurement tester adopted by HP.)

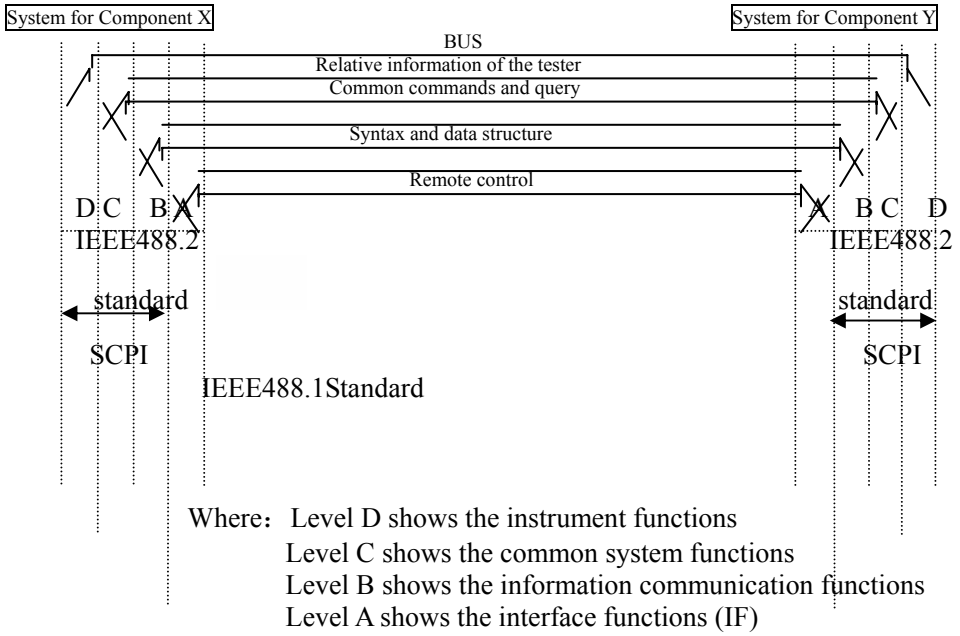

Figure 0-1 SCPI functions levels

8.3 USB remote control system

USB remote control system can control device by USB interface, which fits the protocol of USBTMC-USB488 and USB2.0.

8.3.1 System configuration

Use USB cable to connect the USB interface on the rear panel to USB port.

8.3.2 Install drive

When using USB to connect TH2684 with computer at first time，the computer will note：“New hardware is found”. Then figure 0-2 will appear，select “Install the software automatically (Recommended)”.

Figure 0-2

Then press“Next”，select the correct path(niusbtmc.inf)，as Figure 0-3，press “Next”, the installation of TH2684 USBTMC drive is finished.

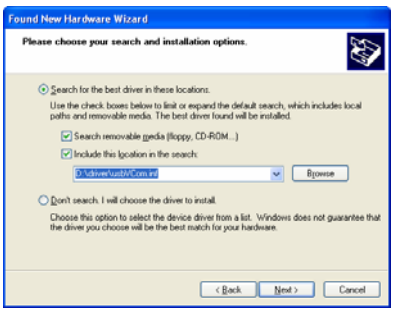

Figure 0-3

After the drive is installed，user can see ”usb test and measurement device”, shown as Figure 0-4:

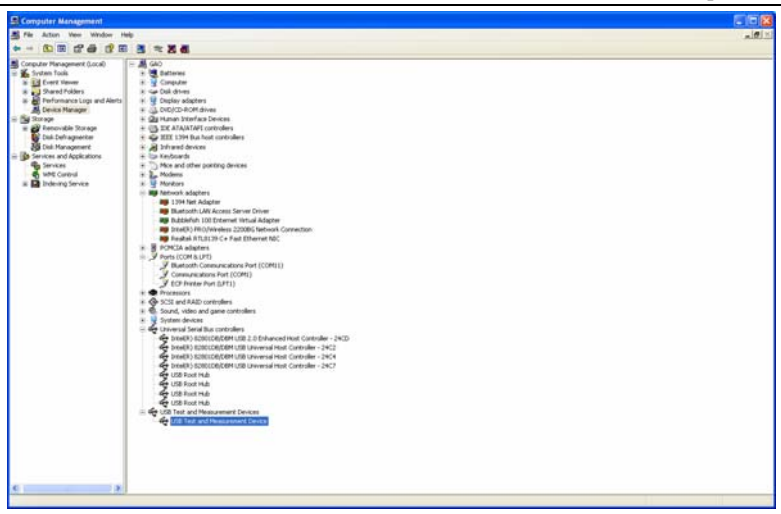

Figure 0-4

When user is using USBTMC interface, labview software can be used to access the instrument.

8.4 USBCDC virtual serial port

When “USBCDC” is selected, the USB interface can be configured as a virtual serial port (VCom).

8.4.1 System configuration

Connect PC and TH2684/TH2684A to the USB interface through a USB cable.

8.4.2 Install drive

The method of installing USBCDC drive is the same as that of USBTMC，but when selecting driving file, select the path of usbVCom.inf，as Figure 0-5.

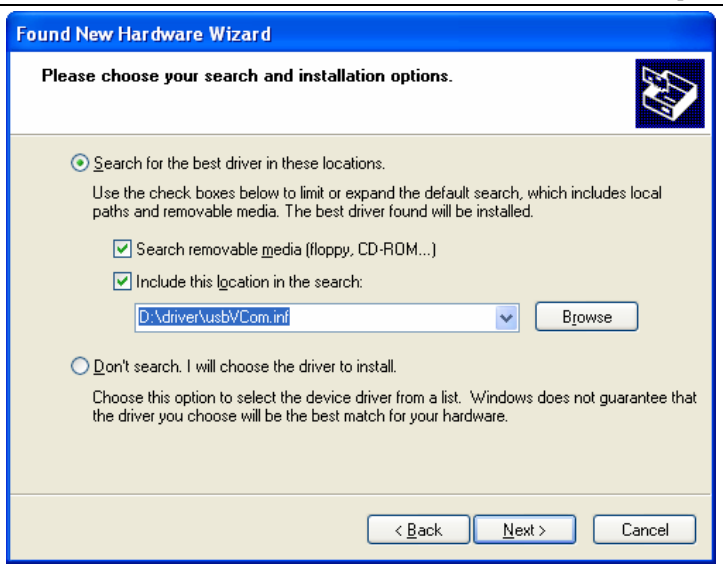

Figure 0-5

After the drive is installed，user can see ”usb VCom port”. Shown as Figure 0-6:

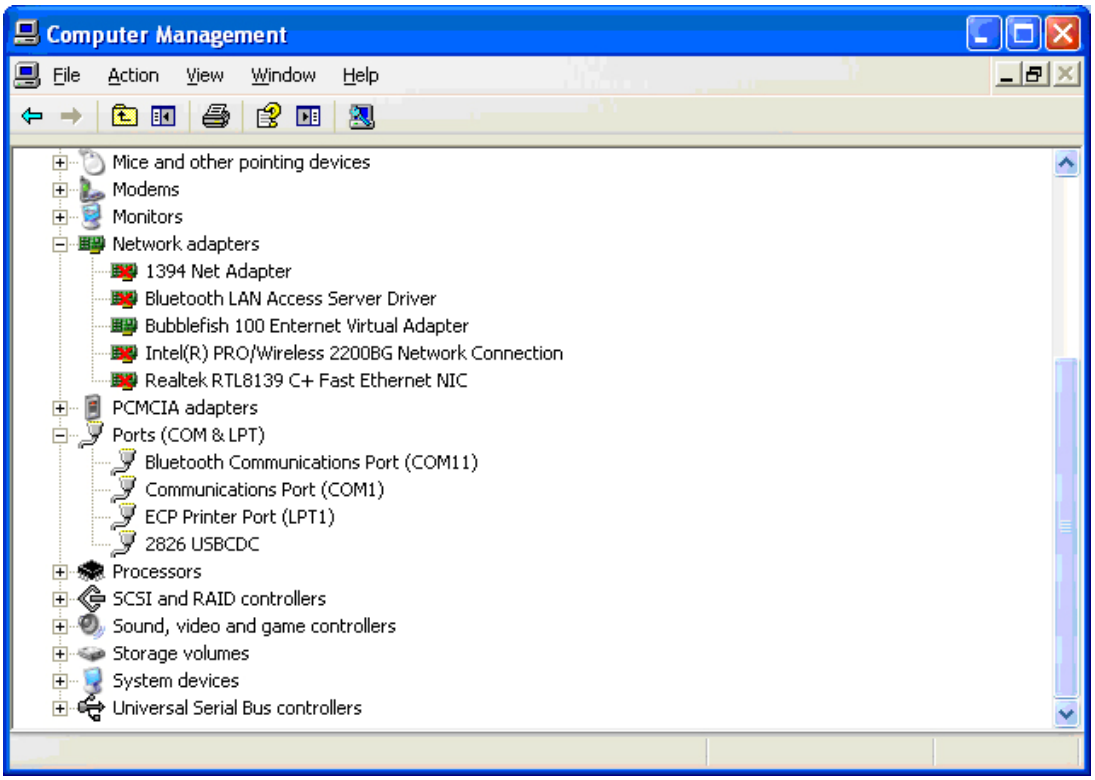

Figure 0-6

Now, usb VCom port acts as a serial port. When PC has no serial port, the communication software based on this serial port can be used as USB virtual serial port.

Chapter 9 Command Reference

This chapter describes the commands specific for TH2684/TH2684A.
The signs in this manual are as follows:
NR1: integer, e.g.:123
NR2: fix-point number, e.g.: 12.3
NR3: floating-point number, e.g.: 12.3E+5
NL: carriage key, ASCII code: 10
ˆEND: EOI signal in IEEE-488
There are two types of intrument commands: GPIB common commands and SCPI (Standard Commands for Programmable Instruments). GPIB common commands complying with IEEE488.2-1987 standard are applicable to all instruments, but TH2684/TH2684A does not support all common commands. SCPI commands are tree structured.

9.1 GPIB common commands for TH2684

●*RST	●*TRG	●*IDN	●*TST
●*ESE	●*SRE	●*ESR	●*STB
●*OPC	●*CLS		

- *RST is used to reset the instrument.

Command syntax: *RST
For example: WrtCmd(“*RST”);

- *TRG is used to trigger the measurement instrument, and transimit the test result to the output buffer.

Command syntax: *TRG
For example: WrtCmd(“*TRG”);

- *CLS is used to clear the state register of the standard events and the service request.

Command syntax: *CLS
For example: WrtCmd(“*CLS”);

- *IDN? is used to return the ID of TH2684.

Query syntax: *IDN?
Return format: <manufacturer>,<model>,<firmware><NL^END>
Where,
<manufacturer> manufacurer name (Tonghui)
<model> instrument model (TH2684)
<firmware> software version (VER1.0.0)
For example: WrtCmd(“*IDN?”);

- *TST? is used to query self-test, to perform intermal self-test and generate the error message report. For TH2684, if the query result is “0”, there is no error.

Query syntax: *TST?
Return format: 0<NL^END>

Where,

0 0（NR1）

For example: WrtCmd("*TST?");

- *ESE (standard Event Status Enable command) is used to set the open bits of the standard event status register). This query command returns the open bits setting state of the event status register.

Command syntax: *ESE<value>

Where,

<value> NR1 format, the dicimal for every bit of the state register.

The definition for event status register is shown in the table below.

Bit	Description
7	Power On(PON) Bit
6	User Request(URQ) Bit
5	Command Error(EME) Bit
4	Execution Error(EXE) Bit
3	Device Dependent Error(DDE) Bit
2	Query Error(QYE) Bit
1	Request Control(RQC) Bit
0	Operation Complete(OPC) Bit

Query syntax: *ESE?

Return format: <value><NL^END>

For example: WrtCmd("*ESE?");

- *SRE (Service Request Enable command) is used to set the open bits of the status byte register. This query command returns the current setting status of the status byte register.

Command syntax: *SRE<value>

Where,

<value> NR1 format, the decimal for the status byte register.

The definition for the status byte register is shown in the table below.

Bite	Description
7	Operation Status Register Summary Bit
6	RQS(Request Service) Bit
5	Standard Event Status Register Summary Bit
4	MAV(Message Available) Bit
3-0	Always 0(zero)

Query syntax: *SRE?

Return format: <value><NL^END>

For example: WrtCmd("*SRE?");

- *ESR? returns the value of the event status register.

Query syntax: *ESR?

Return format: <value><NL^END>

Where,

<value> NR1 format, the decimal for the value of the event status register.

The definition for the event status register is shown in the table below.

Bit	Description
7	Power On(PON) Bit
6	User Request(URQ) Bit
5	Command Error(EME) Bit
4	Execution Error(EXE) Bit
3	Device Dependent Error(DDE) Bit
2	Query Error(QYE) Bit
1	Request Control(RQC) Bit
0	Operation Complete(OPC) Bit

For example: WrtCmd("*ESR?");

- *STB? reads the value of the service status register. It has no effect on the value of the service status register.

Query syntax: *STB?
Return format: <value><NL^END>
Where,
<value> NR1 format, the decimal for the value of the status register.
The definition for the status word is shown in the table below.

Bit	Description
7	Operation Status Register Summary Bit
6	RQS(Request Service) Bit
5	Standard Event Status Register Summary Bit
4	MAV(Message Available) Bit
3-0	Always 0(zero)

For example: WrtCmd("*STB?");

- *OPC is used to set the OPC bit of the event status register when TH2684 has finished the test task. At the same time, this command will notify the instrument that the buffer of the instrument should be set to 1 (decimal: 49).

Command syntax: *OPC
For example: OUTPUT 717;"*OPC"! Set the OPC bit when the previous command has been finished.
Query syntax: *OPC?
Return format: 1 <NL^END>
Where,
1 equals to ASCII code 1, decimal 49.
For example: WrtCmd("*OPC?")

9.2 Command structure

The toppest command in the command tree is called root command or root. A lower command level can be executed only through a specified path.

Command terminator: a command terminator, such as NL (line break, ASCII code is10）

Colon (:) Used to separate the higher level commands and the lower level commands.

Semicolon (;) Used as a separator to execute multiple commands on a single line.

Question mark (?) Used to generate a query for the command in front of it.

Comma (,) Used to separate the command and the parameters.

White space (␣) Used to separate the command and the parameters.

Single quotation mark (‘’) The command analysis program will not process the quotated contens..

Asterisk (*) Used to indicate that the command followed is common command.

The follow figure shows how does a lower command been executed by use of colons and semicolons.

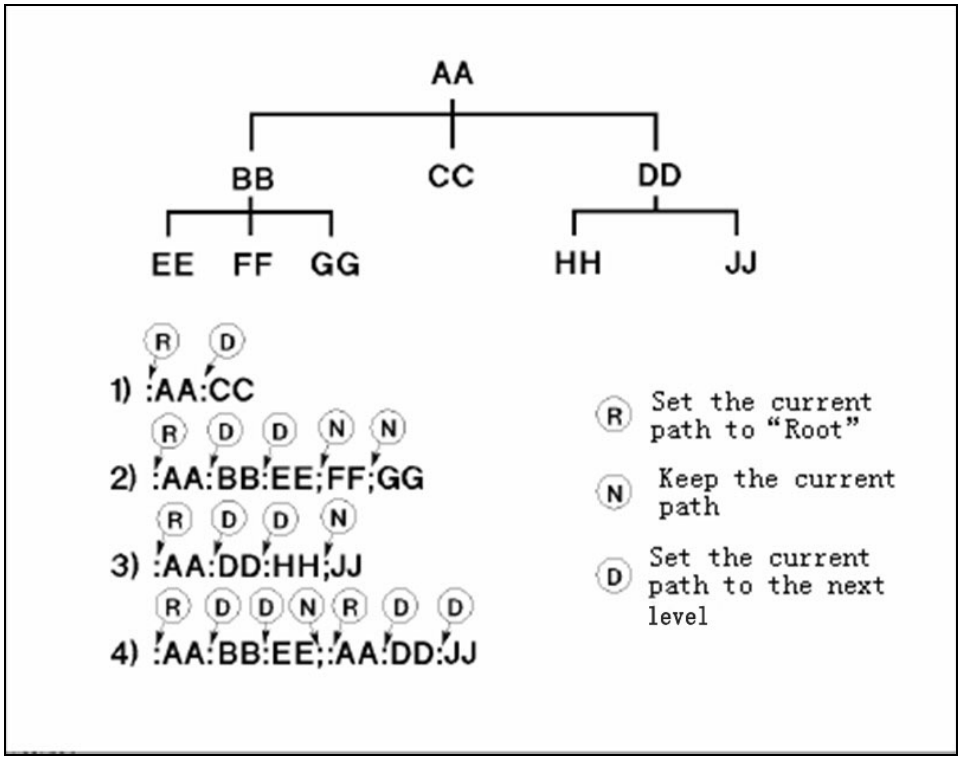

Figure 7-1 Correct uses of colons and semicolons

In figure 7-1, function of the ：AA：BB：EE；FF；GG command is equal to that of the following three commands:

：AA：BB：EE
：AA：BB：FF
：AA：BB：GG

9.3 Command syntax

- Common command syntax
- Common command is not tree structured so it can be sent to any command level.
- Letter case (upper and lower) is ignored.
- Terminator
- ␣ whitespace

9.4 Input format

The input command must consists of at least 4 letters followed be a "?" or a whitespace, and then the data.

The input data can be a fix-point number or a floating-point number followed by a sign or not.

For example: 1V
+1.0E+00
10E-01
0.001K
.000001MA

Exponents can be replaced by the following mnemonics, such as 1E+00 or 1K.

Prototype	Mnemonic
1E+18	EX
1E+15	PE
1E+12	T
1E+9	G
1E+6	MA
1E+3	K
1E-3	M
1E-6	U
1E-9	N
1E-12	P
1E-16	F

Suffix like V, Ω, A or s is optional.
The command used to turn on/ off the instrument or a function can be ON/OFF or 0/1.

If a large number of setting commands are used, the spill of the input buffer is possible. One way to stop spilling is using command abbreviations (Use the first 4 letters in the command name) and does not send the leading zero in the data. Use 0/1 to replace ON/OFF.

9.5 SCPI commands

9.5.1 System commands

●DISPlay	●MesSETup	●TRIGger	●HTOUtput
●HUMReject	●CCHEck	●MESTb	●MEER
●LIMIt	●Mass MEMory	●UserADJust	●XYGRaph
●SEQSetup	●SeqCONt	●SCANSetup	

9.5.2 DISPlay subsystem commands

DISPlay subsystem commands are mainly used to set the display page for the instrument. The :DISPlay? query returns the current page.
When the instrument is in test mode and high voltage exists, no input to the display page is permitted.

Command tree:

```
DISPlay———————— :PAGE    MEASuredisp
                         BINDisp
                         BARDisp
                         SEQDisp
                         XYDIsp
                         SCAnDisp
                         MSETup
                         LTABle
                         BARSetup
                         SSET
                         SeqCONtent
                         XYSeTup
                         SCanSeTup
                         UserADJust
                         SYSTem
                         FLISt

         ——:LINE     “<string>”

         ——:RFONt        LARGe
                         TINY
                         OFF
         ___:Mode        I   / CUR
                         R   / RES
```

The :PAGE command sets the display page.
The DISPlay:PAGE? query returns the current page.

Command syntax: DISPlay:PAGE <page name>

Items that can be set in this page are as follows:

MEASuredisp	Set the display page to the measure display.
BINDisp	Set the display page to the bin number display.
BARDisp	Set the display page to the bar graph display.
SEQDisp	Set the display page to the sequence display page.
XYDIsp	Set the display page to the XY graph display.
SCAnDisp	Set the display page to the scan display.
MSETup	Set the display page to the measure setup.
LTABle	Set the display page to the limit setup.
BARSetup	Set the display page to the bar graph setup.
SSET	Set the display page to the sequence setup.
SeqCONtent	Set the display page to the sequence content.
XYSeTup	Set the display page to the XY graph setup.
SCanSeTup	Set the display page to the scan setup.
UserADJust	Set the display page to the user adjustment.
SYSTem	Set the display page to the system setup.
FLISt	Set the display page to the file list.

For example: WrtCmd("DISP:PAGE MEAS"); set the display page to the measure display page.

Query syntax: DISPlay:PAGE?

Return format: <page name><NL^END>

The following item can be seleted for <page name>.

<MEAS>	The current page is measure display.
< BNUM >	The current page is bin number diplay.
< BARD>	The current page is bar graph display.
< SEQM >	The current page is sequence diplay.
< XYMS >	The current page is XY graph.
< SMEAS >	The current page is scan display.
< SSET >	The current page is measure setup.
< LSET>	The current page is limit setup.
<BSET>	The current page is bar graph setup.
< SSET>	The current page is sequence setup.
< SCON >	The current page is sequence setup.
< XYST >	The current page is XY graph setup.
< SCST>	The current page is scan setup.
< UADJ >	The current page is user adjustment.
<SYST >	The current page is system setup.
< FLIS >	The current page is file list.

The :LINE command sets the current measure theme. The maximum length of the theme string is 20.

The: DISPlay:LINE? query returns the current measure theme. The theme string will be displayed in the file list page, and saved as the file name.

Command syntax: DISPlay:LINE"<string>"

Where,

<string> is the ASCII string (the maximum length is 20).

For example: WrtCmd("DISP:LINE "Resistor meas"");

Query syntax: DISPlay:LINE?

Return format: <string><NL^END>

The :ResultFONt sets the the font of the measure result.

The :DISPlay:RFONt？ query returns the current font of the measure result.

Command syntax: DISPlay:RFONt <font>

The following items can be selected for <font>:

LARGe: display the measure result with the large size, the hold time is 12ms.

TINY: display the measure result with the small size, the hold time is 5ms.

OFF: do not display the measure result, but the result can be read from the bus.

Query syntax: DISPlay:RFONt？

Return format: <font><NL^END>

Following fonts are for selection:

LARGE

TINY

OFF

The :MODE command sets the measure display mode for the basic measure page.

The :DISPlay:MODE？ query returns the current measure display mode.

Command syntax: DISPlay:MODE <font>

Following fonts are for selection:

I / CUR : current display mode

R / RES: resistance display mode

Query syntax: DISPlay:MODE？

Return format: <font><NL^END>

Following fonts are for selection:

RESISTANCE

CURRENT

9.5.3 MsetSETup subsystem commands

```
MsetSETup ┬── :HTVOlt       <value>
          │                 ON (1)
          │                 OFF(0)
          ├── :HT2Volt      <value>
          │                 ON (1)
          │                 OFF (0)
          ├── :HTMOde       ON (1)
          │                 OFF (0)
          ├── :HTCUrent     2
          │                 25
          │                 200
          ├── :HT2CUrent    2
          │                 25
          │                 200
          ├── :SPEEd        FAST
          │                 MED
          │                 SLOW
          ├── :AVERage      <value>
          ├── :RANGe        AUTO
          │                 1mA
          │                 100uA
          │                 10uA
          │                 1uA
          │                 100nA
          │                 10nA
          │                 1nA
          ├── :RINL         10k(ohm)
          │                 1M(ohm)
          ├── :DISCharge    ON(1)
          │                 OFF(0)
          ├── :MDELay       <value>
          ├── :CHTIme       <value>
          │
```

The :HTVOlt command sets the voltage of the test power source in the basic measure page.
The :MSET: HTVOlt? query returns the current voltage setup.
Command syntax:

```
                 ┌ ON     （1）
MSET: HTVOlt     │ OFF    （0）
                 └ <value>
```

Where,
Character 1 (49) is equal to ON.
Character 0 (48) is equal to OFF.
<value> ranging from 10V to 1000V.

For example: WrtCmd(“MSET: HTVOlt 100V”); set the voltage to100V.

Query syntax: MSET: HTVOlt?
Return format: <NR1><NL^END>
< NR3 ><NL^END>

The :HT2VOlt command sets the voltage of the charge power source in the basic measure page.
The :MSET:HT2VOlt? query returns the setup of the current power source.
Command syntax:

MSET: HT2VOlt { ON (1) / OFF (0) / <value> }

Where,
Character 1 (49) is equal to ON.
Character 0 (48) is equal to OFF.
<value> In ON mode, the voltage ranges from 10V to 1000V.
In OFF mode, the voltage ranges from -10V to +10V.

For example: WrtCmd("MSET: HT2VOlt 100V"); Set the charge voltage to 100V.
Query syntax: MSET: HTVOlt?
Return format: <NR1><NL^END>
< NR3 ><NL^END>

The :HTMOde command sets the track mode to ON or OF.
The :MSET: HTMOde? query returns the current track mode.
Command syntax:

MSET: HTMOde { ON (1) / OFF (0) }

Where,
Character 1 (49) is equal to ON.
Character 0 (48) is equal to OFF.

For example: WrtCmd("MSET: HTMOde ON"); Set the track mode to ON.
Query syntax: MSET: HTMOde?
Return format: <NR1><NL^END>

The :HTCUrent command set the charge current limit of the test power source in the basic measure page.
The :MSET: HTCUrent? query returns the current limit of the test power source.
Command syntax:

MSET: HTCUrent { 2 / 25 / 200 }

For example: WrtCmd("MSET: HTCUrent 2"); Set the current limt to 2mA.
Query syntax: MSET: HTCUrent?
Return format: < NR3 ><NL^END>

The :HT2CUrent command sets the charge current limit of the charge power source in the basic measure page.
The :MSET: HT2CUrent? query returns the current limit of the charge source.
Command syntax:

MSET: HT2CUrent { 2 / 25 / 200 }

For example: WrtCmd("MSET: HT2CUrent 2"); Set the current limt to 2mA.
Query syntax: MSET: HT2CUrent?
Return format: < NR3 ><NL^END>

The :SPEEd command sets the test speed.
The :MSET: SPEEd? query returns the current test speed.
Command syntax:

MSET: SPEEd { FAST / MED / SLOW }

For example: WrtCmd("MSET: SPEEd MED"); Set the test speed to MED.
Query syntax: MSET: SPEEd?
Return format:

{ FAST / MED / SLOW } + <NL^END>

The :AVERage command sets the test average.
The :MSET: SPEEd? query returns the current average.
Command syntax:

MSET: AVERage <value>

For example: WrtCmd("MSET: AVERage 1"); Set the average to 1.
Query syntax: MSET: SPEEd?
Return format: < NR3 ><NL^END>

The :RANGe command sets the measurement range.
The :MSET: RANGe? query returns the current range setting.
Command syntax:

MSET: RANGe { AUTO / 1ma / 100ua / 10ua / 1ua / 100na / 10na / 1na }

For example: WrtCmd("MSET: RANGe auto"); set the range mode to auto.
Query syntax: MSET: RANGe?
Return format:

{ auto / 1mA / 100uA / 10uA / 1uA / 100nA / 10nA / 1nA } + <NL^END>

The :RINL command sets the test internal resistance.
The :MSET: RINL? query returns the current internal resistance settting.
Command syntax:

MSET: RINL { 10k (10kohm) / 1M (1Mohm)

For example: WrtCmd("MSET: RINL 10k"); set the internal resistance to 10kΩ when the current is less than 10nA.

Query syntax: MSET: RINL?

Return format:

{ 10kΩ / 1 MΩ

The :DISCharge command sets the discharge ON or OFF.

The :MSET: DISCharge? query returns the current discharge mode.

Command syntax:

MSET: DISCharge { ON (1) / OFF (0)

Where,

Character 1 (49) is equal to ON.

Character 0 (48) is equal to OFF.

For example: WrtCmd("MSET: DISCharge ON"); set the discharge funtion to ON.

Query command: MSET: DISCharge?

Return format: <NR1><NL^END>

The :MDELay command sets the delay time for single measurement on the measurement page.

The :MSET: MDELay? query returns the current delay time.

Command syntax:

MSET: MDELay <value>

<value> ranges from 0ms to 1000ms.

For example: WrtCmd("MSET: MDELay 1s"); set the delay time to 1s.

Query syntax: MSET: MDELay?

Return format: < NR3 ><NL^END>

The :CHTIme sets the charge time for single measurement on the measurement page.

The :MSET: CHTIme? query returns the current charge time.

Command syntax:

MSET: CHTIme <value>

<value> ranges from 0ms to 1000ms.

For example: WrtCmd("MSET: CHTIme 1s"); set the delay time to 1s.

Query syntax: MSET: CHTIme?

Return format: < NR3 ><NL^END>

9.5.4 TRIGger subsystem command

TRIGger subsystem commands are used to set the intrument trigger source and the delay time after triggering and to trigger measurements.
Command tree:

```
TRIGger ──┬── [:IMMediate]  ON
          │                 OFF
          ├── :SOURce EXTernal
          │           BUS
          │           HOLD
          ├── :MODE   CONTinue
          │           SINGle
```

The IMMediate command is used to trigger or switch off test.
Command syntax:

TRIGger[:IMMediate] { ON / OFF }

For example: WrtCmd("TRIG ON");

NOTE: TRIGGER ON/OFF commands in <MEAS DISP> and <BIN DISP> are the same. Input the command first time, the instrument take a test; Input the command second time, the instrument will stop testing.

The :SOURce command sets the trigger source mode.
The :TRIGger:SOURce? query returns the current trigger source mode.
Command syntax:

TRIGger:SOURce { EXTernal / BUS / HOLD }

Where,

EXTernal	Triggered by HANDLER interface.
BUS	Triggered by RS232 interface or GPIB interface.
HOLD	Triggered by pressing Test.

For example: WrtCmd("TRIG:SOUR BUS");
Query syntax: TRIGger:SOURce?
Return format:

{ EXT / BUS / HOLD } <NL^END>

The :MODE command sets the intrument trigger mode.
The :TRIGger: MODE? query returns the current trigger mode.

Command syntax:

TRIGger:MODE { CONTinue / SINGle }

For example: WrtCmd("TRIG:MODE CONT"); set the trigger mode to CONTinue.

Query syntax: TRIGger: MODE?

Return format: { CONTINUE / SINGLE } + <NL^END>

9.5.5 HTOUtput subsystem commands

HTOUtput subsystem commands set the high voltage, in CONTINUE mode, to ON or OFF.

Command syntax:

HTOUtput { ON (1) / OFF (0) }

For example: WrtCmd("HTOUtput ON");

Query syntax: HTOUtput?

Return format:< NR1> <NL^END>

9.5.6 HUMReject subsystem commands

HUMReject subsystem commands set the instrument working frequency.

Command syntax:

HUMReject { 50 （50Hz） / 60 (60Hz) }

For example: WrtCmd("HUMReject 50 ");

Query syntax: HUMReject?

Return format:

{ 50Hz / 60Hz } <NL^END>

9.5.7 CCHEck subsystem commands

CCHEck subsystem commands set the contact check function to ON or OFF.

Command syntax:

CCHEck { ON (1) / OFF (0) }

For example: WrtCmd("CCHEckON");

Query syntax: CCHEck?
Return format: < NR1> <NL^END>

9.5.8 MESTb subsystem commands

The :MESTb: query returns the test error status register.
Test error status registers are as follows:

Figure 8.5.8

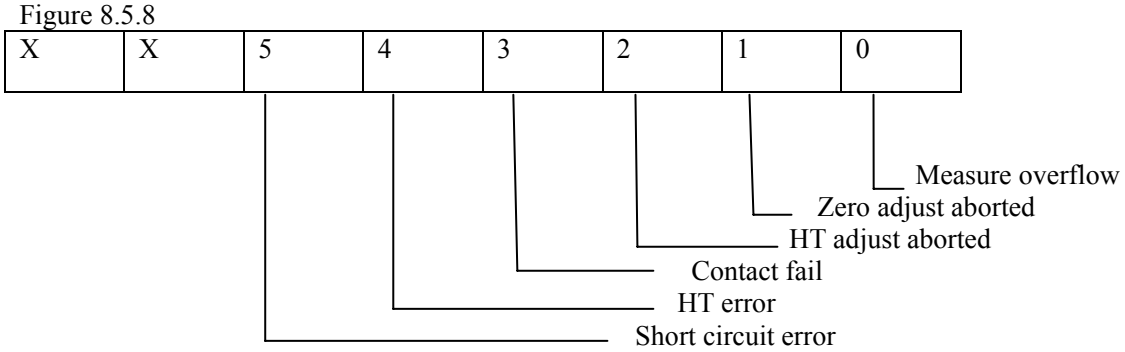

9.5.9 MEER subsystem commands

The :MEER command sets the test error status register.
See 8.5.8 section for test error status registers.

9.5.10 LIMIt subsystem commands

LIMIt subsystem commands set bin comparator functions such as comparator ON/OFF, limit list.
Command tree:

```
LIMIt ──┬── [:STATe]   ON (1)
        │                OFF(0)
        ├── :MODE   Absolute TOLerance
        │           Percent TOLerance
        │           SEQuence
        ├── :TOLerance ──┬──:NOMinal <value>
        │                └──  :BIN<n> <low limit>,<high limit>
        ├── :SEQuence──────:BIN <BIN1 low limit>,<BIN1 high limit>,
        │                  <BIN2 high limit>,<BIN3 high limit>,
        │                  …… ,<BINn high limit>
        ├── :PARAM     Res
        │              Cur
        │
```

The [:STATe] command sets the comparator function to ON or OFF.
The :LIMIt [:STATe]? query returns the current status of the comparator funtion.
Command syntax:

LIMIt [:STATe] { ON | OFF | 1 | 0 }

Where,
Character 1 (49) is equal to ON.
Character 0 (48) is equal to OFF.

For example: WrtCmd("LIMIt ON")
Query syntax: LIMIt [:STATe]?
Return format: <NR1><NL^END>

The :MODE command sets the limit mode for the comparator function.
The :LIMIt:MODE? query returns the current limit mode.
Command syntax:

LIMIt:MODE { ATOLerance | PTOLerance | SEQuence }

Where,
ATOLerance Set the limt mode to ATOLerance.
PTOLerance Set the limit mode to PTOLerance.
SEQuence Set the limit mode to SEQuence.

For example: WrtCmd("LIMIt:MODE ATOL")
Query syntax: LIMIt:MODE?
Return format:

{ ATOL | PTOL } <NL^END>

SEQ

The :TOLerance:NOMinal command sets the nominal value of the tolerance mode. (The function is valid only in the tolerance mode.)
The LIMIt:TOLerance:NOMinal? query returns the current nominal value.
Command syntax: LIMIt:TOLerance:NOMinal <value>
Where, <value> is a nominal value in NR1, NR2 or NR3 data format.
For example: WrtCmd("LIMIt:TOL:NOM 100E-12")
Query syntax: LIMIt:TOLerance:NOMinal?
Return format: <NR3><NL^END>

The :TOLerance:BIN<n> sets low and high limits for each bin in tolerance mode. (The function is valid only in the tolerance mode.)
The LIMIt:TOLerance:BIN<n>? query reutns the current high and low limits of each bin.
Command syntax: LIMIt:TOLerance:BIN<n><low limit>,<high limit>
Where,
<n> 1 to 9（NR1）: bin number
<low limit> NR1, NR2 or NR3 data format: low limit.
<high limit> NR1, NR2 or NR3 data format: high limit.
Note: The low limit should less than the high limit, or a prompt information will pop up.
For example: WrtCmd("LIMIt:TOL:BIN1 -5,5")
WrtCmd("LIMIt:TOL:BIN2 –10,10")
Query syntax: LIMIt:TOLerance:BIN<n>?
Return format: <low limit>,<high limit>,<NL^END>

The :SEQuence:BIN command sets high and low limits in sequence mode. (This function is valid only in sequence mode.)
The LIMIt:SEQuence:BIN? query returns current high and low limits in sequence mode.
Command syntax: LIMIt:SEQuence:BIN <BIN1 low limit>,<BIN1 high limit>,
<BIN2 high limit>,…, <BINn high limit>
Where,
<BIN1 low limit> NR1, NR2 or NR3 data format, low limit of BIN1.
<BIN1 high limit> NR1, NR2 or NR3 data format, high limit of BIN1.
<BINn high limit> NR1, NR2 or NR3 data forma, high limit of BINn. (The maximum value of n is 9.)
Note: The low limit is less than the high limit.
For example: WrtCmd("LIMIt:SEQ:BIN 10,20,30,40,50")
Query syntax: LIMIt:SEQuence:BIN?
Return format: <BIN1 low limit>,<BIN1 high limit>,<BIN2 high limit>,…,
<BINn high limit><NL^END>

The :PARAM command sets the parameter mode (current or resistance).
Command syntax: LIMIt: PARAM { CUR / RES }
For example: WrtCmd("LIMIt: PARAM CUR")
Query syntax: LIMIt: PARAM?
Return format:
{ CURRENT + <NL^END> / RESISTANCE }

9.5.11 Mass MEMory subsystem commands

Mass MEMory subsystem commamds are used to save and load files.
Command tree:

```
Mass MEMory ┬ :LOAD ─── :STATe <record number>
            └ :STORe ── :STATe <record number>
```

The :LOAD:STATe command loads the stored file.
Command syntax: MMEMory:LOAD:STATe <value>
Where,
<value> 0 to 9（NR1）: serial number of file
For example: WrtCmd(“MMEM:LOAD:STAT 1”);

The :STORe:STATe command saves the current setting file.
Command syntax: MMEMory:STOR:STATe <value>
Where,
<value> 0 to 9（NR1）: serial number of file
For example: WrtCmd(“MMEM:STOR:STAT 1”);

9.5.12 UserADJust subsystem commands

UserADJust subsystem commands are used to set user adjust function, open circuit and load adjust.

```
UserADJust ── :OPEN ──┬── :STATe   ON    (1)
                      │            OFF (0)
                      ├── :APPLy   RN1
                      │            RN2
                      │            RN3
                      │            RN4
                      │            RN5
                      │            RN6
                      │            RN7
                      │            ALL
                      ├── :CLEAr   RN1
                      │            RN2
                      │            RN3
                      │            RN4
                      │            RN5
                      │            RN6
                      │            RN7
                      │            ALL
              │
              ├── :LOAD ──┬── :STATe   ON (1)
              │           │            OFF (0)
              │           ├── :START
              │           ├── :APPLy
              │           ├── :CLEAr
              │           ├── :STOP
              │           ├── :NOMInal   <value>
```

The :OPEN:STATe command sets the open circuit adjustment state.
The UserADJust:OPEN:STATe? query retuns the current state of open circuit adjust function.
Command syntax:

UserADJust:OPEN:STATe { ON | OFF | 1 | 0 }

Where,
1 (49) enables the open circuit adjust function, which is equal to ON.
0 (48) disables the open circuit adjust function, which is equal to OFF.

For example: WrtCmd("UADJ:OPEN:STAT ON")
Query syntax: UserADJust:OPEN:STATe?
Return format: <NR1><NL^END>

The :OPEN:APPLy sets the open circuit adjust to ON.
The UserADJust:OPEN:APPLy? query returns that the current open circuit function comes to a success or not.

UserADJust :OPEN: APPLy { RN1 | RN2 | RN3 | RN4 | RN5 | RN6 | RN7 | ALL }

Where,

RN1 ----1mA
RN2 ----100uA
RN3 ----10uA
RN4 ----1uA
RN5 ----100nA
RN6 ----10nA
RN7 ----1nA
ALL ---- All ranges

For example: WrtCmd("UADJ:OPEN: APPLy RN1"); apply open correction adjust to range 1.

The :OPEN:CLEAr command clears data of the open circuit adjust.
The UserADJust:OPEN:CLEAr? query returns the operation of clearing data of the open circuit adjust comes to a success or not.

UserADJust :OPEN: CLEAr { RN1 | RN2 | RN3 | RN4 | RN5 | RN6 | RN7 | ALL }

Where,

RN1 ----1mA
RN2 ----100uA
RN3 ----10uA
RN4 ----1uA
RN5 ----100nA
RN6 ----10nA
RN7 ----1nA
ALL ---- All ranges

For example: WrtCmd("UADJ:OPEN: CLEAr RN1"); clear open circuit adjust data for range 1.

The :LOAD:STATe command set the load adjust state.
The UserADJust:LOAD:STATe? query returns the current load adjust state.
Command syntax:

UserADJust:LOAD:STATe { ON | OFF | 1 | 0 }

Where,
1 (49) enables the load adjust function, which is equal to ON.

0 (48) disables the load adjust function, which is equal to OFF.
For example: WrtCmd(“UADJ：LOAD：STAT ON”)
Query syntax: UserADJust:LOAD:STATe?
Return format: <NR1><NL^END>

The :LOAD:START command starts a test in the load adjust mode.
Command syntax: UserADJust:LOAD:START
For example: WrtCmd(“UADJ：LOAD：START”)

The :LOAD:APPLy command is used to correct the load.
Command syntax: UserADJust:LOAD:APPLy
For example: WrtCmd (“UADJ：LOAD：APPLy”)

The :LOAD:CLEAr command clears the load adjust data in the load adjust mode.
Command syntax: UserADJust:LOAD:CLEAr
For example: WrtCmd (“UADJ：LOAD：CLEAr”)

The :LOAD:STOP command stops testing in the load adjust mode.
Command syntax: UserADJust:LOAD:STOP
For example: WrtCmd (“UADJ：LOAD：STOP”)

The :LOAD: NOMInal command applies to the nominal value in load adjust mode.
The UserADJust:LOAD: NOMInal? query returns the current nominal value.
Command syntax: UserADJust:LOAD: NOMInal <value>
For example: WrtCmd (“UADJ：LOAD：NOMInal 100M”)
Query syntax: UserADJust:LOAD: NOMInal?
Return format: <NR3><NL^END>

9.5.13 XYGRaph subsystem commands

UserADJust subsystem commands are used to set parameters of XY graph.

```
XYGRaph ──── : XSCAle     TIME
        ├── :TIME         <value>
        ├──:YSCAle     RES
                      CUR
        ├── :CURScope   1ma
                        100ua
                        10ua
                        1ua
                        100na
                        10na
                        1na
```

The : XSCAle sets the X-scale unit of XY graph.
The XYGRaph: XSCAle? query returns the current X-scale unit.
Command syntax: XYGRaph : XSCAle TIME
Where, TIME means that the X-scale unit is time.
VDC means that the X-scale unit is voltage.
Fore example: WrtCmd (“XYGRaph:XSCAle:TIME”)
Query syntax: XYGRaph: XSCAle?
Return format: TIME + <NL^END>

The :TIME command sets the X-scale as time.
The XYGRaph: TIME? query returns the current setup value of time.
Command syntax: XYGRaph :TIME <value>
Setup range: 1s to 1000s by a resolution of 1s.
Query syntax: XYGRaph: TIME?
Return format: <NR3><NL^END>

The : YSCAle command sets the Y-scale unit of XY graph.
The XYGRaph: YSCAle? query returns the current Y-scale unit.
Command syntax:

```
XYGRaph : YSCAle { RES
                 { CUR
```

Where,
RES Y-scale is resistance.
CUR Y-scale is current.
For example: WrtCmd (“XYGRaph:YSCAle:CUR”)
Query syntax: XYGRaph: YSCAle?
Return format:

```
{ CURRENT
{ RESISTANCE        +<NL^END>
```

The :CURScope command sets the Y-scale as current.
The XYGRaph: CURScope?query returns the current full scale value.
Command syntax:

XYGRaph : CURScope { 1ma | 100ua | 10ua | 1ua | 100na | 10na | 1na }

For example: WrtCmd (“XYGRaph: CURScope 1ma”)
Query syntax: XYGRaph: CURScope?
Return format:

{ 1ma | 100ua | 10ua | 1ua | 100na | 10na | 1na } +<NL^END>

9.5.14 SEQSetup subsystem commands

The SEQSetup subsystem commands are used to set parameters in the sequence setup page.

```
SEQSetup ──┬── :CHIOce    DEF1
           │              DEF2
           │              DEF3
           │              DEF4
           │              USER1
           │              USER2
           │              USER3
           │              USER4
           │
           ├──:DELete     USER1
           │              USER2
           │              USER3
           │              USER4
           │
           ├──:COPY        DEF1
           │              DEF2
           │              DEF3
           │              DEF4
           │              USER1
           │              USER2
           │              USER3
           │              USER4
           │
           ├── :PASTe     USER1
           │              USER2
           │              USER3
           │              USER4
```

The :CHIOce command sets the test sequence in the sequence setup page.
The XYGRaph: CHIOce? query returns the current test sequence number.
Command syntax:

```
                          { DEF1  }
                          { DEF2  }
                          { DEF3  }
                          { DEF4  }
SEQSetup : CHIOce         { USER1 }
                          { USER2 }
                          { USER3 }
                          { USER4 }
```

For example: WrtCmd (“SEQSetup : CHIOce USER1”); set USER1 as the test sequence.
Query syntax: XYGRaph: CHIOce?

Return format:

{ DEF1 / DEF2 / DEF3 / DEF4 / USER1 / USER2 / USER3 / USER4 } + <NL^END>

The : DELete command deletes contents in the sequence.
Command syntax:

SEQSetup : DELete { USER1 / USER2 / USER3 / USER4 }

For example: WrtCmd (“SEQSetup : DELete USER1”); delete contents in USER1.

The : COPY command copies contents in a certain sequence.
Command syntax:

SEQSetup : COPY { USER1 / USER2 / USER3 / USER4 }

For example: WrtCm d(“SEQSetup : COPY USER1”); set contents in USER1.

The : PASTe command paste contents in the internal memory to a certain sequence.
Command syntax:

SEQSetup : PASTe { USER1 / USER2 / USER3 / SER4 }

For example: WrtCmd (“SEQSetup : PASTe USER1”); paste contents in the internal memory to USER1.

9.5.15 SeqCONt subsystem commands

SeqCONt subsystem commands set parameters in the sequence content page.

```
SeqCONt ──┬──:USER1 ┬──:1    DELete
          │         │        INTSert
          │         │        <item>,<hv>,<rang>,<avg>,<low>,<upp>,<time>
          │         ├──:2    DELete
          │         │        INTSert
          │         │        <item>,<hv>,<rang>,<avg>,<low>,<upp>,<time>
          │         │
          │         │  …
          │         ├──:18   DELete
          │         │        INTSert
          │         │        <item>,<hv>,<rang>,<avg>,<low>,<upp>,<time>
          │
          ├──:USER2 ┬──:1    DELete
          │         │        INTSert
          │         │        <item>,<hv>,<rang>,<avg>,<low>,<upp>,<time>
          │         ├──:2    DELete
          │         │        INTSert
          │         │        <item>,<hv>,<rang>,<avg>,<low>,<upp>,<time>
          │         │  …
          │         └──:18   DELete
          │                  INTSert
          │                  <item>,<hv>,<rang>,<avg>,<low>,<upp>,<time>
          │
          ├──:USER3  …
          │
          ├──:USER4 ┬──:1    DELete
          │         │        INTSert
          │         │        <item>,<hv>,<rang>,<avg>,<low>,<upp>,<time>
          │         ├──:2    DELete
          │         │        INTSert
          │         │        <item>,<hv>,<rang>,<avg>,<low>,<upp>,<time>
          │         │  …
          │         ├──:18   DELete
          │         │        INTSert
          │         │        <item>,<hv>,<rang>,<avg>,<low>,<upp>,<time>
```

The :USER1 / USER2 / USER3 / USER4:DELete command deletes sequence.
Command syntax:

SeqCONt : :<USER1 /USER2 /USER3 /USER 4> ： <NO.> ： DELete

For example: WrtCmd (“SeqCONt : :USER1:1:DELete”); delete the contents of 1 in USER1.

The :USER1 / USER2 / USER3 / USER4:NTSert command insert a blank line before a sequence.
Command syntax:

SeqCONt : :<USER1 /USER2 /USER3 /USER 4> ： <NO.> ： INTSert

For example: WrtCmd ("SeqCONt : :USER1 ： 1 ： INTSert"); insert a blank line in the place of 1 in USER1.

The :USER1 / USER2 / USER3 / USER4 ： <NO.> ：
<item>,<hv>,<rang>,<avg>,<low>,<upp>,<time> command sets a line of parameters in the sequence content page.
Command syntax:
SeqCONt : :<USER1 /USER2 /USER3 /USER 4> ： <NO.> ：
<item>,<hv>,<rang>,<avg>,<low>,<upp>,<time>

Specific setups are as follows:

ITEM	HV(V)	RANG	AVG	LOW	UPP	TIME
CHARage	< NR3>	--	--	--	--	<value>
WAIT	< NR3>	--	--	--	--	<value>
MEAS	--	<value>	<value>	<value>	<value>	
MCON	<value>	<value>	<value>	<value>	<value>	<value>
MTOG	--	<value>	<value>	<value>	<value>	<value>
DISCharge	--	--	--	--	--	<value>
FLASH	--	<value>	--	<value>	<value>	<value>

Range of HV: TH2684 ： 10V --- 500V
TH2684A： 10V --- 1000V
Range of RANG: 1 – 8 (See specific details listed below.)
Range of AVG: 1 - 100
Range of LOW: 1pA – 1mA, 100kΩ - 1PΩ
Range of HIGH: 1pA – 1mA, 100kΩ - 1PΩ
Range of TIME: 0(AUTO), 10ms – 100s
For example: WrtCmd("SeqCONt : :USER1:1:CHAR,100V,1,1,100MΩ,100GΩ,0")

NOTE:
For SCPI commands, specific ranges are as follows:
1---AUTO: auto range, In range of 1nA to 10nA, the input internal impedance is 1M Ω; and in other ranges, it is 10k Ω.
2----1mA : 10OuA – 1mA ; input internal impedance 10kΩ
3----100uA : 10uA – 100uA ; input internal impedance 10 kΩ
4----10uA : 1uA – 10uA ; input internal impedance 10 kΩ
5----1uA : 100nA – 1uA ; input internal impedance 10 kΩ
6----100nA : 10nA – 100nA ; input internal impedance 10 kΩ
7----10nA : 1nA – 10nA ; input internal impedance 1MΩ
8---1nA : 10pA – 1nA ; input internal impedance 1MΩ

9.5.16 SCANSetup subsystem commands

SCANSetup subsystem commands set parameters in the scan setup page.

```
SCANSetup ──┬── :CHIOce      DEF1
            │                DEF2
            │                DEF3
            │                DEF4
            │                USER1
            │                USER2
            │                USER3
            │                USER4
            │
            ├── :StartNUM    0 -- 31
            ├── :EndNUM      0 -- 31
            ├── :ScanMODe    MEASuement
            │                JUDGement
            │
            ├── :ScanCONn    TEST
            │
```

The :CHIOce command sets the sequence number of the scan page.
The :SCANSetup: CHIOce? query returns the current sequence number.
Command syntax:

```
                    ( DEF1  )
                    ( DEF2  )
                    ( DEF3  )
                    ( DEF4  )
SCANSetup: CHIOce   ( USER1 )
                    ( USER2 )
                    ( USER3 )
                    ( USER4 )
```

For example: WrtCmd(“SCANSetup: CHIOce USER1”), set USER1 as the sequence number.
Query syntax: SCANSetup: CHIOce?
Return format:

```
( DEF1  )
( DEF2  )
( DEF3  )
( DEF4  )
( USER1 )        + <NL^END>
( USER2 )
( USER3 )
( USER4 )
```

The :StartNUM command sets the start channel number of the scan page.
The :SCANSetup: StartNUM ? query returns the current start channel number.
Command syntax: SCANSetup: StartNUM 0---31
Query syntax: SCANSetup: StartNUM ?
Return format: <NR3><NL^END>

The : EndNUM command sets the end channel number of the scan page.
The SCANSetup: EndNUM? query returns the current end channel number.
Command syntax: SCANSetup: EndNUM 0---31
Query syntax: SCANSetup: EndNUM?
Return format: <NR3><NL^END>

The : ScanMODe command sets the display mode in the scan page.
The :SCANSetup: ScanMODe? query returns the current display mode.
Command syntax:

SCANSetup: ScanMODe { MEASuement / JUDGement }

Query syntax: SCANSetup: ScanMODe?
Return format:

{ MEASuement / JUDGement } <NL^END>

The : ScanCONn command sets to enable or disable the scan function.
The SCANSetup: ScanCONn ? query returns the the scan function is enabled or disabled.
Command syntax: SCANSetup: ScanCONn TEST
Query sntax: SCANSetup: ScanCONn ?
Return format: <NR1><NL^END>

9.5.17 BARSetup subsystem commands

BARSetup subsystem commands set parameters in the bar graph setup page.

BARSetup / BARDisp :BarSCAle <NR1>

The : BarSCAle command sets the bar scale of the bar graph display page.
The BARSetup: BarSCAle? query returns the current bar scale.
Command syntax:
: BarSCAle <NR1>

NOTE: In CUR mode, <NR1> ranges from 0 to 8.
In RES mode, <NR1> ranges from 0 to 10.

For example: WrtCmd("BARSetup: BarSCAle 0"), set 0 as the bar scale.
Query syntax: BARSetup: BarSCAle?
Return format:
<NR1> + <NL^END>

9.5.18 FETCh? subsystem commands

FETCH? subsystem commands set TH2684 to output a measurement result.
Command tree:

```
FETCh ──┬── [:IMP]?
        └── :SMONitor        :VDC?
```

The [:IMP]? command output the last measurement result to the output buffer zone of TH2684.
Query syntax: FETCh[:IMP]?
For example: WrtCmd(“FETC?”);
The returned value:
Good contact:

RN HIGH / RN LOW / 1.000K / R ,%+12.5E , /I,%12.5E, (SN) + NL^END

Test result

Bin number

Bad contact:
NO CONTACT
The :SMONitor:VDC? command displays the current test voltage.
Query syntax: FETCh:SMONitor:VDC?
The returned value:

%+12.5E, %+12.5E

Test voltage

Charge voltage

Chapter 10 Handler Interface

For the instrument, HANDLER interface is used to control external trigger and to output BIN signals in accordance with limit setup.The HANDLER interface is used for external triggering of the instrument and to output BIN signals in accordance with predefiened limits. It is 25-pin interface. Figures 9.1.1 and 9.1.2 show the laypout of the interface.

10.1 Pins of HANDLER interface

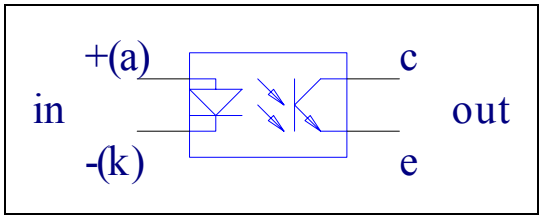

9.1.1 Circuit of output/input terminal

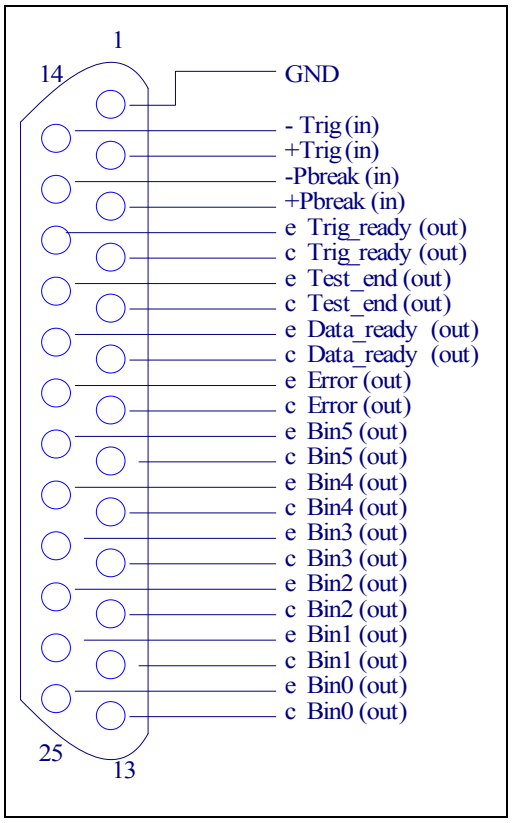

Figure 9.1.2 Layout of pins

Table 0-1 HANDLER signals

Signal	Description
/BIN0 /BIN1 /BIN2 /BIN3 /BIN4 /BIN5	Bin result: All /BIN (bin signal) outputs are collector ones.
/EXT.TRIG	External trigger: In EXT.TRIG mode, TH2684 is triggered by rising edge impulse signals applied on the pin.
/PBREAK	Voltage control: In EXT.TRIG mode, TH2684 is triggered by rising edge impulse signals applied on the pin. It is used to enable or disable the voltage.
/DATA_READY	Data ready signal
/TEST_END	Test end signal
/TRIG_READY	Trigger ready signal
GND	Ground

10.2 Electrical characteristics

Specifications for optocoupler are as follows:
Otherwise, external power source and series resistor are essential to input and output.

The optocoupler input triggers the tester by an input current of 10mA (maximum 30mA forward and maximum 6V reverse).
The optocoupler outputs are rated 25V and 10mA each.
Bothe input and output require external power and series resistors (maximum 35V, 10mA).

10.3 BIN signals

10.3.1 BIN signals in the test display page.

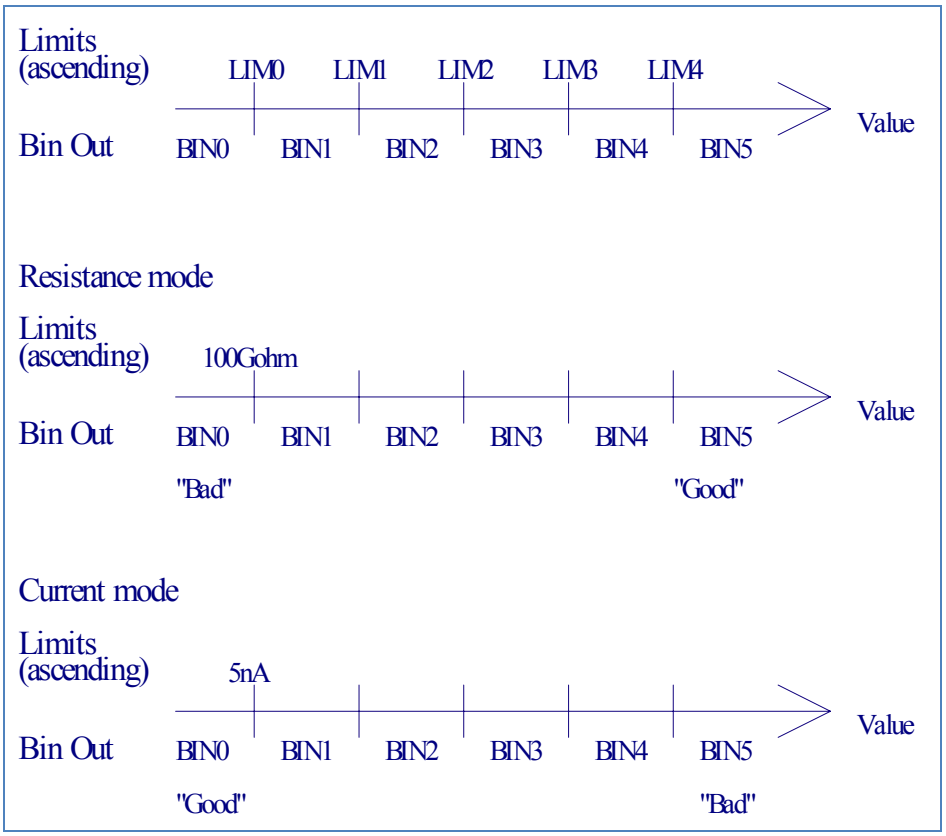

Figure 9.3 Layout of BIN signals

Above figure shows the layout of BIN signals that is in accordance with limit setup. If the test value is larger than LIM1 and less than LIM2, the BIN2 signal will be activated (the output optocoupler will be switched on).
Both in resistance mode (figure 9.3) and current mode (figure 9.3), limit setup is organized in ascending order.This means that when in resistance mode and a LIM value is set, a “goood” component will set as BIN5; while in current mode, it will be set as BIN0. More limit setups can be used to exclude shorted or open components.

NOTE:

The instrument must be set to resistance mode when resistance limit setup is to be used.
The instrument must be set to current mode when current limit setup is be used.

10.3.2 BIN signals in the sequence display page

PASS	BIN5
LOW FAIL	BIN0
HIGH FAIL	BIN4

10.4 Examples for HANDLER input/ output

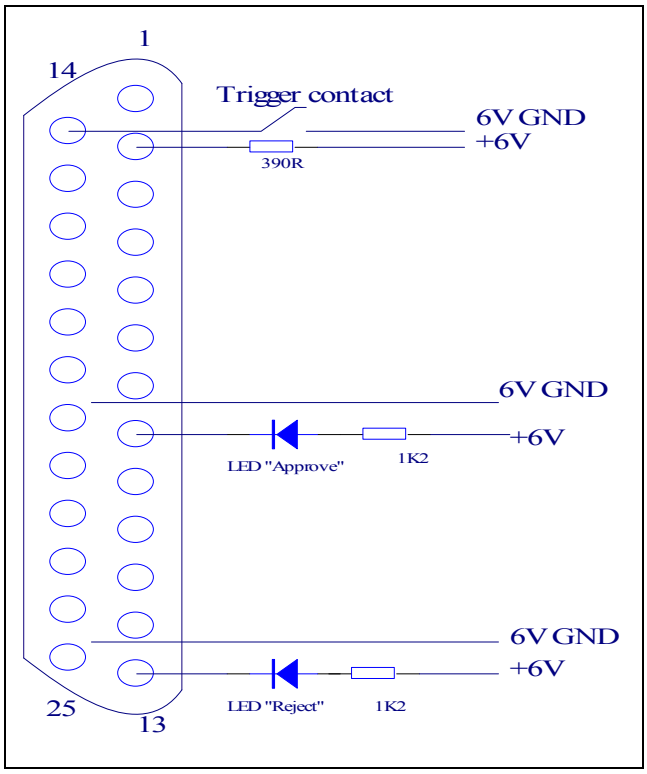

Figure 9.4 Example for the circuit

Figure 9.4 shows an example of a setup that can be used to perform flash test and /or IR test. In both cases, the BIN0 is set if there is a flash over or if the insulation resistance is too low. Otherwise the BIN5 is set if the component is approved. The series reistances is calculated from:

$$R_{Trig} = \frac{6V-2V}{20mA}$$

$$R_{LED} = \frac{6V-2V}{5mA}$$

Chapter 11 Package Contents and Warranty

11.1 Package contents

Following items should be contained in the package. Verify that you have received all below items. If anyone is missing, please contact the company or the dealer without delay.

Table 8-1 Package contents

Serial number	Name	Quantity
1	TH2684 Insulation Resistance Meter	1
2	Test cable	1
5	Test fixture	1
6	Three-wire power line ✓	1
7	Fuse of 2A ✓	2
8	Operation manual	1
9	Test report	1
10	Warranty card	1

☞ **NOTE:** TH2684 HANDLER interface link cable and TH2684-IEEE-488 interface are **optional.** Visit our website for more information.

11.2 Warranty

This Tonghui instrument product is warranted against defects in material and workmanship for a period of two years from the date of shipment. You should supply us with the warranty card before you enjoy the free maintenance service. This warranty does not apply in the event of misuse or abuse of the product or as a result of unauthorized alterations or repairs. Tonghui will, without charge, repair or replace, at its option, defective product or component parts.

The maintenance for this instrument should be performed by professional maintenance personnel. Do not substitute the internal components unauthorized when maintaining. In order to ensure the measurement accuracy, the instrument must be measured and corrected after maintenance. You should bear the maintenance expense for damages caused by unauthorized repairing or substituting components.

The instrument should not be placed in the environment present direct sunlight and moisture. See 1.2.

Place the instrument in the original package box if you do not use it for a long time.